INSTALLATION OF R-230 HYDRAULIC KIT
IN-CAB CONTROLS

INSTALLATION SAFETY PRECAUTIONS

<u>If any installation problems are encountered, please call G&B Specialties, Inc. for technical assistance before continuing with the installation process.</u>

CAUTION
WARNING

- Failure to heed to any of the following warnings could result in severe bodily injury and/or equipment damage.
- Read and understand this manual completely before attempting installation of the equipment.
- Installation instructions provided below only address the Rafna railgear equipment. Applicable railway company procedures and policies must be adhered to.
- Always disconnect the vehicle's battery when welding on the vehicle or railgear in order to protect the vehicle's electrical system.
- Before performing any work under the vehicle or railgear, ensure the engine is turned off and the parking brake is set.
- Beware of all pinch points on the railgear and keep all parts of the body clear.
- When routing hydraulic hoses, ensure that the hoses do not contact any sharp edges or hot surfaces.
- When routing electrical wires, ensure that the wires do not contact any sharp edges or hot surfaces.
- All wire connections are to be soldered and heat shrink sealed to prevent future corrosion related problems.
- All wires must be covered with protective cable loom.

INSTALLATION OF HYDRAULIC KIT

The following procedure details the installation of the hydraulic kit. The hardware required for this installation is listed in table 1.

Table 1: Hydraulic Kit Installation Parts

Part Number	Description	Qty
R-048	Hydraulic Pump and Manifold	1
R-700	In-Cab Control Panel	1
P-00136	Pump Mounting Plate	1
P-00137	Pump Spacer	1
P-00138	Mounting Angle, Pump	1
P-00139	Mounting Angle, Pump	1
P-00132	Mounting Bracket, Manifold	1
P-00131	Mounting Angle, Manifold	1
CO-071	10 Amp Circuit Breaker	1
S-002002	Single P.O. Check Valve	1
CO-130N	“Front Gear Up” Decal	1
CO-130O	“Rear Gear Up” Decal	1
CO-130P	“Front Gear Down” Decal	1
CO-130Q	“Rear Gear Down” Decal	1
R-2868	Locking Cable Holding Collar	1
S-001031	Railgear Operation Decal	2
849FSO-04-04	1/4 Male O-Ring Boss to 1/4 Male JIC 90°	11
849FSO-04-06	3/8 Male O-Ring Boss to 1/4 Male JIC 90°	3
848-FSO-04-06	3/8 Male O-Ring Boss to 1/4 Male JIC Straight	4
HFS2-04	Hose 30” Long	2
HFS2-04	Hose 20” Long	2
HFS2-04	Hose 240” Long	2
HFS2-04	Hose 10” Long	2
C5216X4X6	Swivel Adapter, 1/4 JIC Female x 3/8" ORB Male	2
HU04-04NJ	1/4 Female JIC Straight Coupler (On Hoses)	12
R-990KIT-308	1/4” UNC Gr. 8 Bolt x 7/8” Long	4
	1/4” SAE Washer, Gr.8	4
	1/4” Lock Washer, Gr.8	4
	5/16” UNC Gr. 8 Bolt x 1” Long	6
	5/16” SAE Washer, Gr.8	8
	5/16” Lock Washer, Gr.8	4
	5/16” UNC Nylock Nut, Gr.8	2
	3/8” UNC Gr. 8 Bolt x 3/4” Long	3
	3/8” SAE Washer, Gr.8	3
	3/8” Lock Washer, Gr.8	3
Not Supplied	2 & 14 Gauge Wire, Terminals, Loom, Etc.	As Req’d

1. The pump is shipped with a manifold, a hand pump handle, a solenoid, and a rubber terminal boot.

2. Locate and install the solenoid in a convenient location under the hood near the vehicle's battery using installer supplied hardware. Ensure that the solenoid's body is electrically grounded.

3. Install a ¼" male O-Ring Boss to ¼" male JIC 90° fitting into each P, T, C1, C2, C3 and C4 ports of the manifold and into the T port of the pump.

4. Install a $^3/_8$" male O-Ring Boss to ¼" male JIC 90° fitting into the P port of the pump. Ensure that the check valve components remain in the port cavity.

5. Assemble the pump and manifold sub-assemblies as shown.

6. Locate and weld the manifold and pump support brackets as shown.

7. Install the pump and manifold assemblies as shown.

8. There are four directional valve manual over-rides on the face of the manifold. The decal plates can be installed on the face of the manifold as shown. Stick the decal plates next to the respective over-rides such that they are properly oriented.

9. Install a ¼" male ORB to ¼" male JIC 90° fitting into each port of each railgear cylinder.

10. Connect one 20" long hydraulic hose between the C1 port on the manifold and the blind end port on the rear railgear cylinder.

11. Connect one 20" long hydraulic hose between the C2 port on the manifold and the rod end port on the rear railgear cylinder.

12. Connect one 30" long hydraulic hose between the P port on the manifold and the P port on the pump.

13. Connect one 30" long hydraulic hose between the T port on the manifold and the T port on the pump.

14. Connect one 240" long hydraulic hose to the C3 port on the manifold and mark the other end of this hose as "Blind".

15. Connect one 240" long hydraulic hose to the C4 port on the manifold and mark the other end of this hose as "Rod".

16. Route the two 240" long hydraulic hoses to the front of the vehicle along the left side of the frame and secure in place with tie-wraps. Where necessary, fasten the hose to the frame with installer supplied hose clips and hardware.

17. Ensure that none of the hoses contact any sharp edges or hot surfaces. Tie-wrap all hoses securely leaving enough slack for the railgear to function.

18. Install the In-Cab Control Panel in a convenient location in the cab of the vehicle.

19. Install the circuit breaker under the hood near the previously installed railgear pump solenoid.

20. The pump manifold has three wire harnesses and two wires connected to it:
    a) One 4' wire harness for the rear railgear with a control box on the end.
    b) One 36' wire harness for the front railgear with a control box on the end.
    c) One 22' wire harness for the in-cab controls with terminated wires on the end.
    d) One white and one black wire each with ring terminals on the ends.

21. Using suitable 14 gauge wire, cable loom, connectors, solder and heat shrink tubing:
    a) Lengthen the white wire if required and connect it from the manifold to the switching terminal on the railgear pump solenoid previously mounted under the hood.
    b) Lengthen the black wire if required and connect from the manifold through the firewall to the load terminal on the railgear switch on the In-Cab Control panel.
    c) Connect another length of black wire from the power terminal on the railgear switch through the firewall to the "Aux" terminal on the circuit breaker.
    d) Connect another black wire from the "Bat" terminal on the circuit breaker to the power terminal on the solenoid.
    e) Connect another wire from the ground terminal on the railgear switch to a suitable ground location on the vehicle.
    f) Ensure the manifold is properly grounded to the vehicle chassis by connecting a wire from the manifold to a suitable ground location on the vehicle. The railgear may not be properly grounded due to paint on the mounting plates and tar on the frame.
    g) Lengthen the 22' wire harness if require and route it from the manifold through the firewall to the In-Cab Control panel. Connect the wires to the In-Cab Control switches as shown.

22. Using suitable 2 gauge wire, cable loom, connectors, solder and heat shrink tubing:
    a) Connect one wire from the vehicle's battery to the power terminal on the railgear pump solenoid.
    b) Connect another wire from the load terminal on the solenoid to the power terminal on the pump motor. Use the supplied rubber boot to protect the pump power terminal from shorting out.
    c) Ensure the pump motor base is properly grounded to the vehicle chassis by connecting a wire from the pump motor base to a suitable ground location on the vehicle. The railgear may not be properly grounded due to paint on the mounting plates or tar on the frame.

23. Route the 36' wire harness from the pump along the frame to the front of the vehicle and secure in place with tie-wraps. If necessary, the control box can be removed from and reinstalled on the wire harness to facilitate routing. Fabricate a bracket and mount the front railgear control box with installer-supplied hardware in a protected vertical position in a suitable location. Ensure the control box is within reach of the railgear locking cable handle.

24. Route the 4' wire harness from the pump to the rear of the vehicle and secure in place with tie-wraps. If necessary, the control box can be removed from and reinstalled on the wire harness to facilitate routing. Fabricate a bracket and mount the rear railgear control box with installer-supplied hardware in a protected vertical position in a suitable location. Ensure the control box is within reach of the railgear locking cable handle.

25. Ensure that the control boxes are mounted vertically so that the controls do not fill with water and freeze. They should also be mounted in a location protected from road spray etc.

26. Affix the supplied railgear operation decals in a suitable location adjacent to the front and rear control boxes.

27. Ensure all wires and terminals are soldered, heat shrink sealed, enclosed in protective cable loom and secured with tie-wraps.

28. Ensure all holes in the firewall are sealed and protected with a grommet.

29. Fill the hydraulic system and bleed the air out:
    a) Fill the pump tank with **DEXRON III** (or equivalent) hydraulic fluid.
    b) Operate the front railgear up and down briefly to circulate the fluid and bleed the system of air (refer to the Railgear Kit and Hydraulic Kit Operation, Service, and Parts manuals for operation instructions).
    c) Refill the pump tank and repeat the above step until all air is removed from the front hydraulic system.
    d) Operate the rear railgear up and down briefly to circulate the fluid and bleed the system of air (refer to the Railgear Kit and Hydraulic Kit Operation, Service, and Parts manuals for operation instructions).
    e) Refill the pump tank and repeat the above step until all air is removed from the rear hydraulic system.
    f) With both front and rear railgear locked in the road position, fill the pump tank to the full line.

30. Follow the Hydraulic System Relief Valve Setting procedure detailed in the Hydraulic Kit Operating, Service and Parts Manual.

31. Test the fit of the locking cable holding collar on both the front and rear locking cables. Ensure that the locking cable holding collar keeps the railgear locking pin fully disengaged. Grind the locking cable holding collar or adjust the locking cable handle on the cable to fit if necessary.

32. Test the operation of the controls and directional valve manual over-rides. Refer to the operation procedure in the Railgear Kit and Hydraulic Kit Operation, Service, and Parts manuals.

33. Lower both front and rear railgear to rail position and ensure the lock cam converters previously installed prevent the lock pins from engaging the lock cams.

34. Locate and store the hand pump handle and the locking cable holding collar in a secure location in the vehicle cab.

ITEM	PART No.	DESCRIPTION OF ITEM(PART)	QTY.
1	P-00136	PUMP MOUNTING PLATE	1
2	P-00137	PUMP SPACER	1
3	R-048 R-048B	HYDRAULIC PUMP	REF
4	H.H.C.S.	5/16" UNC GR.8 X 1"	4
5	L'WASHER	5/16" GR.8	4
6	F'WASHER	5/16" TYP-A GR.8	4

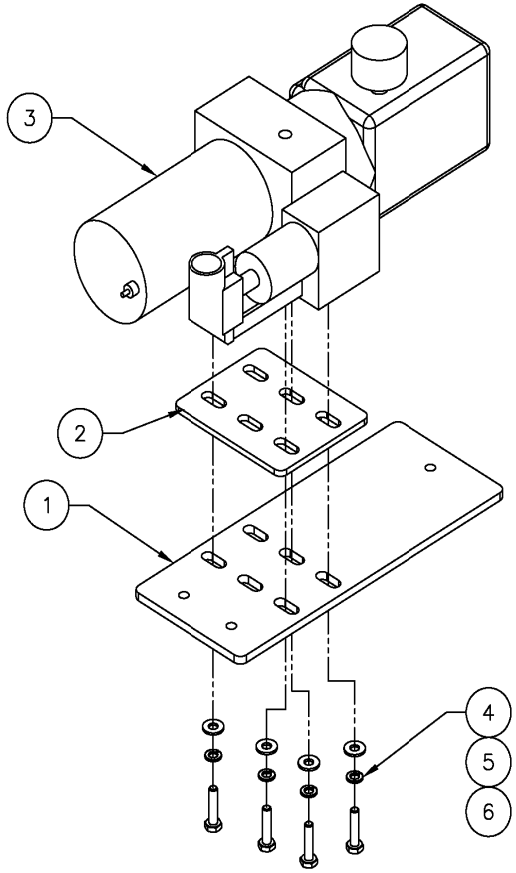

REV	DESCRIPTION OF CHANGES	DATE	BY	APPRV'D	ECN #
A	REVISION A RELEASED	08/11/10	AML		
B	UPDATED BORDER	03/25/22	SMM	JMP	

ALL WELDS TO CONFORM TO AWS D1.1

DRAWN AML
CHECKED
APPROVED

G & B SPECIALTIES INC.
MANUFACTURER OF QUALITY RAILROAD PRODUCTS
BERWICK, PENNSYLVANIA (570) 752-5901, FAX (570) 752-6397

DESIGN - ENGINEERING - MANUFACTURING

G & B SPECIALTIES INC. IS THE OWNER OF THIS DOCUMENT AND ITS CONTENTS AND IS FURNISHED FOR CONSORTIUM PURPOSES ONLY. NO RIGHTS ARE TO BE CONSIDERED IN RESPECT TO THIS DOCUMENT OR ITS CONTENTS, AND IS NOT TO BE COPIED, REPRODUCED OR DISCLOSED TO OTHERS, EXCEPT WITH PRIOR WRITTEN CONSENT OF G & B SPECIALTIES INC.

PUMP SUB ASSEMBLY

SHEET	DRAWING NUMBER	DATE DRAWN	PART NUMBER	REVISION
1	K-H18RRG048-1	08/11/10	K-H18RRG048-1	B

ITEM	PART No.	DESCRIPTION OF ITEM(PART)	QTY.
1	P-00132	MANIFOLD MTG BRKT	1
2	–	MANIFOLD ASSEMBLY	REF
3	H.H.C.S.	1/4" UNC GR.8 X 7/8"	4
4	L'WASHER	1/4" GR.8	4
5	F'WASHER	1/4" TYP-A GR.8	4

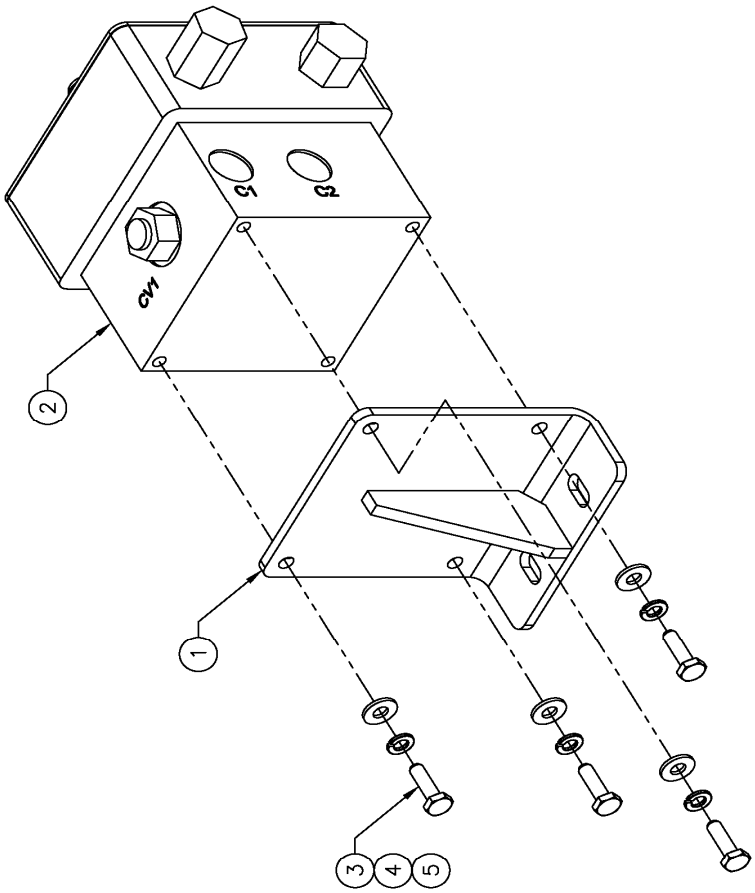

REV	DESCRIPTION OF CHANGES	DATE	BY	APPRV'D	ECN #
A	REVISION A RELEASED	08/11/10	AML		
B	UPDATED BORDER	03/25/22	SMM	JMP	

DRAWN: AML
CHECKED:
APPROVED:

G & B SPECIALTIES INC.
MANUFACTURER OF QUALITY RAILROAD PRODUCTS
BERWICK, PENNSYLVANIA (570) 752-5901, FAX (570) 752-6397

DESIGN - ENGINEERING - MANUFACTURING

G & B SPECIALTIES INC. IS THE OWNER OF THIS DOCUMENT AND THE INFORMATION CONTAINED IN IT. THIS DOCUMENT IS TO BE CONSIDERED IN RESPECT TO THE DOCUMENT AND INFORMATION CONTAINED IN IT AS CONFIDENTIAL. IT IS FURNISHED FOR CONSORTIUM PURPOSES ONLY. NO RIGHTS ARE TO BE CONSIDERED IN RESPECT TO THE DOCUMENT AND INFORMATION CONTAINED IN IT. THE DOCUMENT MAY NOT BE COPIED, REPRODUCED OR DISCLOSED TO OTHERS, EXCEPT WITH PRIOR WRITTEN CONSENT OF G & B SPECIALTIES INC.

MANIFOLD SUB ASSEMBLY

SHEET 1 OF 1 | PART NUMBER K-H18RRG048-2 | REVISION B

DATE 08/11/10

ALL WELDS TO CONFORM TO AWS D1.1

ITEM	PART No.	DESCRIPTION OF ITEM(PART)	QTY.
1	P-00131	MTG ANGL, MANIFOLD	1
2	P-00139	MTG ANGL, PUMP	1
3	P-00138	MTG ANGL, PUMP	1
4	H.H.C.S.	5/16" UNC GR.8 X 1"	2
5	F'WASHER	5/16" TYPE-A GR.8	4
6	NYLOCK NUT	5/16" UNC GR.8	2
7	H.H.C.S.	3/8" UNC GR.8 x 3/4"	3
8	F'WASHER	3/8" TYPE-A GR.8	3
9	L'WASHER	5/16" GR.8	3

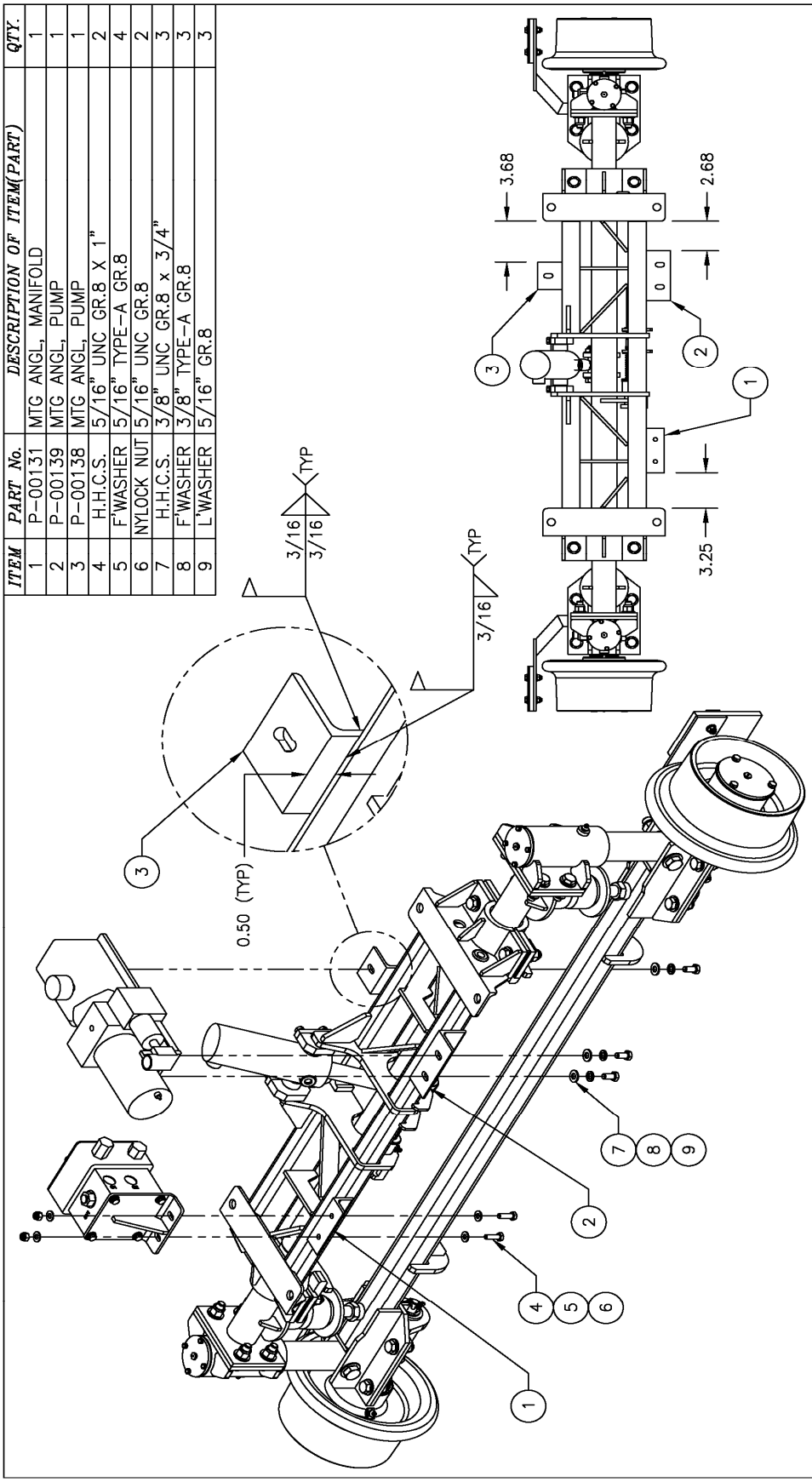

REV	DESCRIPTION OF CHANGES	DATE	BY	APPR'D	ECN #
A	REVISION A RELEASED	08/11/10	AML		
B	UPDATED BORDER	03/25/22	SMM	JMP	

ALL WELDS TO CONFORM TO AWS D1.1

DRAWN: AML
CHECKED
APPROVED

G & B SPECIALTIES INC.
MANUFACTURER OF QUALITY RAILROAD PRODUCTS
BERWICK, PENNSYLVANIA (570) 752-5901, FAX (570) 752-6397

DESIGN - ENGINEERING - MANUFACTURING

G & B SPECIALTIES INC. IS THE OWNER OF THIS DOCUMENT AND ITS CONTENTS AND IS FURNISHED FOR CONFIDENTIAL USE ONLY. NO RIGHTS ARE TO BE CONSIDERED IN RESPECT TO THIS DOCUMENT OR ITS CONTENTS. NO PART OF THIS DOCUMENT MAY BE REPRODUCED OR DISCLOSED TO OTHERS, EXCEPT WITH PRIOR WRITTEN CONSENT OF G & B SPECIALTIES INC.

HYDRAULIC KIT INSTALLATION

SHEET	DRAWING NUMBER	DATE DRAWN	PART NUMBER	REVISION
1	K-H18RRG048B001-3	08/11/10	K-H18RRG048B001-3	B

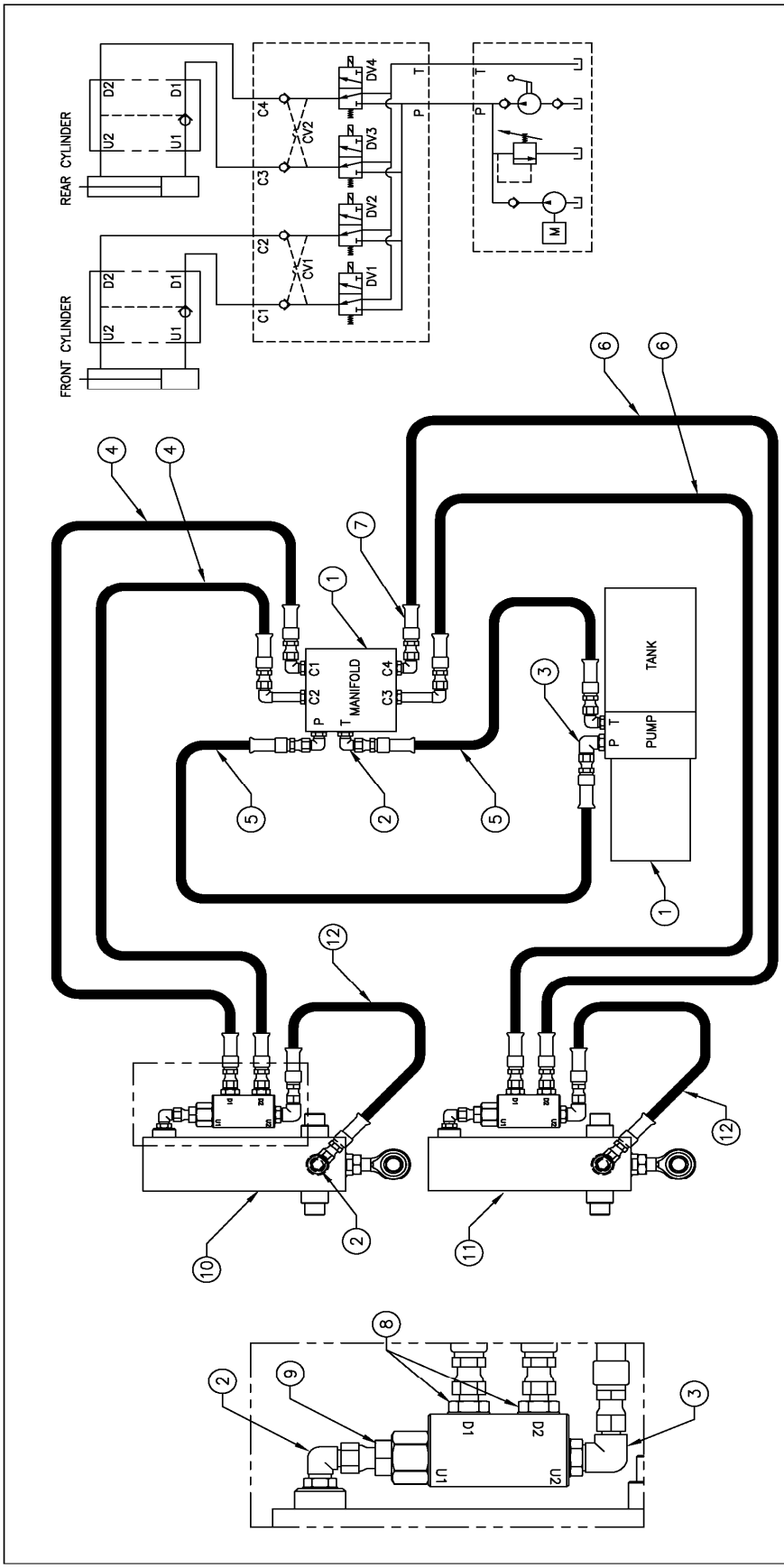

REV	DESCRIPTION OF CHANGES	DATE	BY	APPRV'D	ECN #
A	REVISION A RELEASED	01/21/10	AML		
B	UPDATED BORDER	03/25/22	SMM	JMP	

DRAWN AML
CHECKED
APPROVED

G & B SPECIALTIES INC.
MANUFACTURER OF QUALITY RAILROAD PRODUCTS
BERWICK, PENNSYLVANIA (570) 752-5901, FAX (570) 752-6397

DESIGN - ENGINEERING - MANUFACTURING

G & B SPECIALTIES INC. IS THE OWNER OF THIS DOCUMENT AND ITS CONTENTS AND IS FURNISHED FOR CONFIDENTIAL USE ONLY. NO RIGHTS ARE TO BE CONSIDERED IN RESPECT TO THIS DOCUMENT OR ITS CONTENTS. THIS DOCUMENT MAY NOT BE REPRODUCED OR DISCLOSED TO OTHERS, EXCEPT WITH PRIOR WRITTEN CONSENT OF G & B SPECIALTIES INC

HYDRAULIC KIT IN-CAB/FULL IN CAB CONTROL

SHEET	DRAWING NUMBER	DATE DRAWN	PART NUMBER	REVISION
1	K-H18RRG048003	01/21/10	K-H18RRG048003	B

ITEM	PART No.	DESCRIPTION OF ITEM(PART)	QTY.
1	R-048B	HYDRAULIC PUMP & MANIFOLD	1
2	849FSO-04-04	ADAPTER, 1/4 MALE ORB x 1/4 MALE JIC 90°	11
3	849FSO-04-06	ADAPTER, 3/8 MALE ORB x 1/4 MALE JIC 90°	3
4	H4S2-04	HOSE, 20"	2
5	H4S2-04	HOSE, 30"	2
6	H4S2-04	HOSE, 240"	2
7	HU04-04NJ	COUPLER, 1/4 FEMALE JIC STRAIGHT	16
8	848FSO-04-06	ADAPTER, 3/8 MALE ORB x 1/4 MALE JIC	4
9	C5216X4X6	SWIVEL ADAPTER, 1/4 JIC FEMALE X 3/8 ORB MALE	2
10	-	REAR RAILGEAR CYLINDER	REF
11	-	FRONT RAILGEAR CYLINDER	REF
12	HFS2-04	HOSE, 10"	2

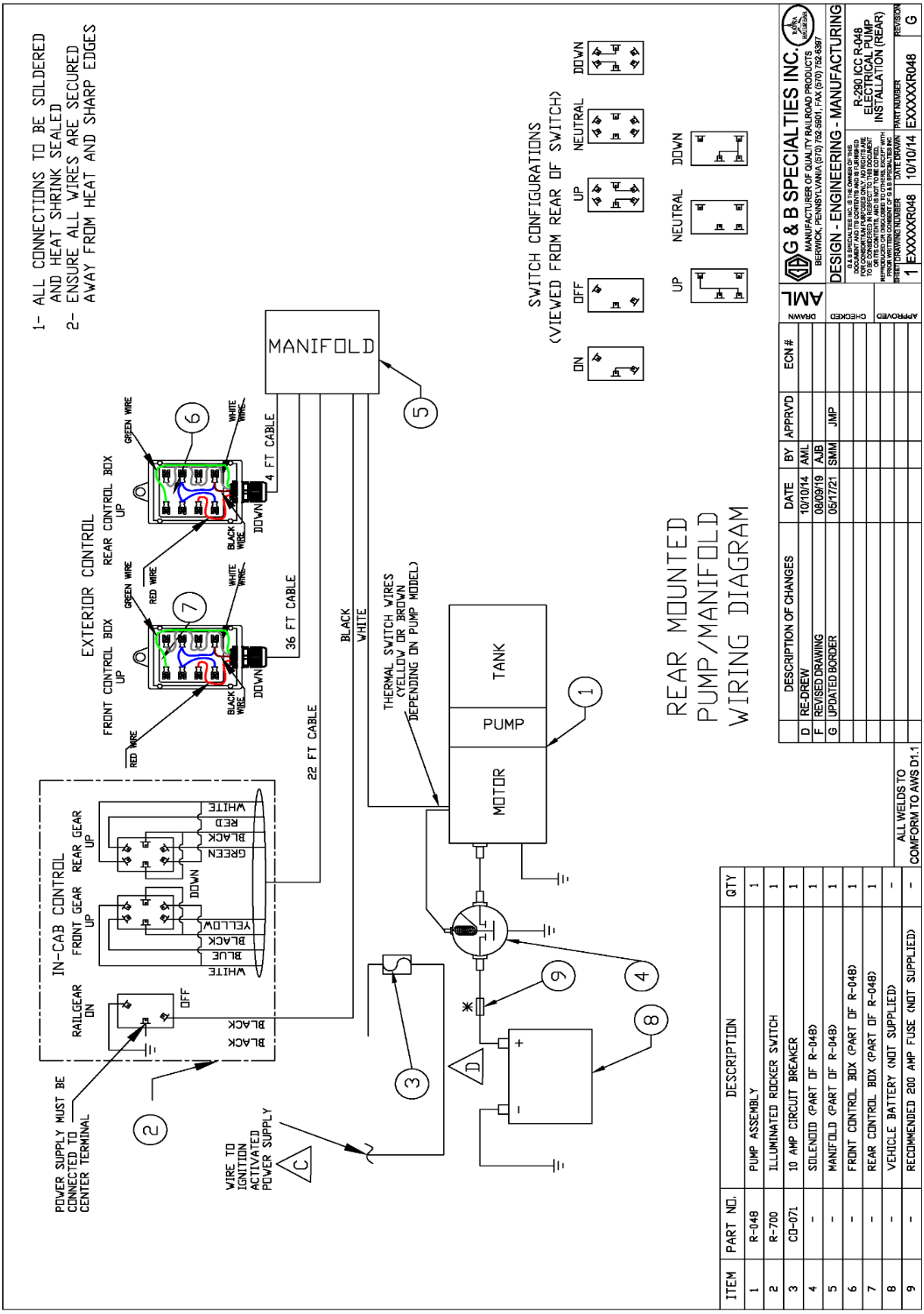
1- ALL CONNECTIONS TO BE SOLDERED AND HEAT SHRINK SEALED
2- ENSURE ALL WIRES ARE SECURED AWAY FROM HEAT AND SHARP EDGES
SWITCH CONFIGURATIONS (VIEWED FROM REAR OF SWITCH)
ON
OFF
UP
NEUTRAL
DOWN
MANIFOLD
EXTERIOR CONTROL
FRONT CONTROL BOX
REAR CONTROL BOX
GREEN WIRE
RED WIRE
WHITE WIRE
BLACK WIRE
4 FT CABLE
36 FT CABLE
22 FT CABLE
BLACK
WHITE
THERMAL SWITCH WIRES (YELLOW OR BROWN DEPENDING ON PUMP MODEL)
TANK
PUMP
MOTOR
IN-CAB CONTROL
RAILGEAR ON
FRONT GEAR UP
REAR GEAR UP
POWER SUPPLY MUST BE CONNECTED TO CENTER TERMINAL
WIRE TO IGNITION ACTIVATED POWER SUPPLY
REAR MOUNTED PUMP/MANIFOLD WIRING DIAGRAM
G & B SPECIALTIES INC.
MANUFACTURER OF QUALITY RAILROAD PRODUCTS
BERWICK, PENNSYLVANIA (570) 752-5901, FAX (570) 752-6397
DESIGN - ENGINEERING - MANUFACTURING
R-290 ICC R-048 ELECTRICAL PUMP INSTALLATION (REAR)
DRAWN AML
CHECKED
APPROVED
DRAWING NUMBER EXXXXXR048
DATE DRAWN 10/10/14
PART NUMBER EXXXXXR048
REVISION G
SHEET 1
D RE-DREW 10/10/14 AML
F REVISED DRAWING 08/09/19 AJB
G UPDATED BORDER 05/17/21 SMM JMP
ALL WELDS TO COMFORM TO AWS D1.1
ITEM PART NO. DESCRIPTION QTY
1 R-048 PUMP ASSEMBLY 1
2 R-700 ILLUMINATED ROCKER SWITCH 1
3 CD-071 10 AMP CIRCUIT BREAKER 1
4 - SOLENOID (PART OF R-048) 1
5 - MANIFOLD (PART OF R-048) 1
6 - FRONT CONTROL BOX (PART OF R-048) 1
7 - REAR CONTROL BOX (PART OF R-048) 1
8 - VEHICLE BATTERY (NOT SUPPLIED) -
9 - RECOMMENDED 200 AMP FUSE (NOT SUPPLIED) -

OPERATION AND SERVICE OF R-230 HYDRAULIC KIT IN CAB CONTROLS

OPERATION AND SERVICE SAFETY PRECAUTIONS

If any operating, service or parts problems are encountered, please call G&B Specialties, Inc. for technical assistance.

CAUTION
WARNING

- Failure to heed to any of the following warnings could result in severe bodily injury and/or equipment damage.
- Read and understand this manual completely before attempting operation of the railgear equipped vehicle.
- Operating instructions provided below only address the Rafna railgear equipment. Applicable railway company procedures and policies must be adhered to.
- Railway company rules governing rail travel must be observed at all times.
- Before performing any work under the vehicle or railgear, ensure the engine is turned off and the parking brake is set.
- Ensure all body parts and loose clothing are clear of any moving parts of the railgear. Be aware of all pinch points.
- Note that if the railgear is part way retracted or extended, opening the manifold directional valve manual over-rides may cause the railgear to drop suddenly causing personal injury. Ensure all body parts are clear of the railgear if it should suddenly drop.
- When operating the railgear using the emergency hand pump, ensure that the correct manual valve over-ride is open for the desired railgear (front or rear) and desired direction of operation (raise or lower).
- Do not use the emergency hand pump to raise and lower the railgear on a routine basis. If the hydraulic pump or manifold should fail, have it repaired as soon as possible.
- If the emergency hand pump has been used to raise or lower the railgear, ensure the manifold directional valve manual over-rides are in the closed and locked position before starting road or rail travel.
- Ensure the hydraulic pump has been de-energized before starting road or rail travel.
- Never operate the vehicle if the Gross Vehicle Weight Rating (GVWR), Gross Axle Weight Rating Front or Rear (GAWR), or the wheel or tire load ratings are exceeded.

OPERATION OF HYDRAULIC KIT

With the hydraulic kit installed on this vehicle, it may be operated as normal.

Never operate the vehicle if the Gross Vehicle Weight Rating (GVWR), Gross Axle Weight Rating Front or Rear (GAWR), or the wheel or tire load ratings are exceeded.

Refer to the Railgear Kit Operation, Service and Parts manual for information on the mechanical operation, service and parts of the railgear.

LOCATION AND OPERATION OF THE RAILGEAR HYDRAULIC SYSTEM CONTROLS

The railgear hydraulic system consists of a hydraulic pump and manifold, a front control box, a rear control box, and an in-cab control panel.

The railgear hydraulic pump must be energized prior to use by turning on the respective dash switch on the control panel in the vehicle cab. At this point the dash switch light should come on but the pump should not run and the railgear should not move until a control button is depressed.

The direction of the front or rear railgear movement is selected by pushing the “Up” or “Down” button on the respective control box located near the railgear. At this point the pump should start and the railgear should move in the selected direction.

The direction of the front or rear railgear movement can also be selected by pushing the “Up” or “Down” button on the respective in-cab control panel switch. At this point the pump should start and the railgear should move in the selected direction. Note that the in-cab controls can only be used to raise the railgear from rail to road position.

To stop the movement of the railgear, release the depressed button.

The pump must be de-energized after use by turning off the respective dash switch. At this point the pump should not be able to run and the control buttons should be in-active.

LOCATION AND OPERATION OF THE HYDRAULIC PUMP EMERGENCY HAND PUMP

If the railgear hydraulic system should fail such that the railgear does not respond to depressing the buttons on the front and / or rear control boxes, then the emergency hand pump system may be used to place the vehicle on rail or remove the vehicle from rail. Follow the standard operation procedure (as detailed in the Railgear Kit Operation, Service and Parts Manual) except substitute the following steps when the procedure requires raising or lowering of the railgear.

1. Remove the hand pump handle from storage and insert the handle into the hand pump located on the body of the hydraulic pump.

2. There are four manifold directional valves, one for each railgear function: “Front Gear Up”, “Front Gear Down”, “Rear Gear Up”, and “Rear Gear Down”. The manual over-rides for these valves are located on the manifold under rubber boots. Only open one manifold directional valve over-ride at a time. To manually open a manifold directional valve over-ride, remove the rubber boot, push in and twist the knob allowing the knob to extend. To manually close a manifold directional valve over-ride, push the knob in, twist the knob to lock it in place and replace the rubber boot.

3. Select and open the manual over-ride for the respective railgear and desired direction of movement.

4. Remove the locking cable holding collar from storage. It can be slipped in between the locking cable handle and the locking cable bulkhead fitting to hold the locking cable in the disengaged position.

5. Pump the emergency hand pump handle to move the railgear. It will require 30 to 50 full strokes to fully raise or lower each railgear.

6. Close the manual over-ride. Ensure all manifold directional valve manual over-rides are closed and locked in position. Replace all the rubber boots.

7. Remove and store the locking cable holding collar and the hand pump handle.

8. Ensure the railgear lock pins are fully engaged as required by the procedure.

SERVICE OF HYDRAULIC KIT

The hydraulic kit must be serviced regularly to avoid damage to the equipment. Table 1 below provides the Recommended Service Schedule and Table 2 provides Standard Fastener Torque Values.

The recommended oil for the railgear hydraulic system is **DEXRON III** or equivalent. In extremely cold weather areas/seasons, Tellus S4 VX32 or equivalent may be used.

Service Required	Initial 100 km (62 Miles) of road and/or rail use	Monthly	6 Months
Inspect hydraulic kit fasteners (re-torque if required)			✓
Inspect all hydraulic fittings and hoses for leaks and wear.		✓	
Check oil in hydraulic reservoir. (fill with railgear raised if req'd)		✓	
Check emergency hand pump and manifold over-ride operation		✓	

Table 2: Standard Fastener Torque Values

Fastener Size	Fastener Torque Value (ft-lbs) Dry
1" UNC Gr. 8 Fasteners	250
¾" UNC Gr. 8 Fasteners	175
$^5/_8$" UNC Gr. 8 Fasteners	150
½" UNC Gr. 8 Fasteners	100
$^3/_8$" UNC Gr. 8 Fasteners	40
¼" UNC Gr. 8 Fasteners	12

HYDRAULIC SYSTEM RELIEF VALVE SETTING

This system is equipped with one relief valve located on the railgear pump body next to the emergency hand pump. This relief valve protects the entire hydraulic system from over pressurization. The relief valve will require adjustment at installation and if ever there appears to be inadequate hydraulic pressure to operate the railgear.

1. Disconnect the hydraulic hose from the "P" port of the pump.

2. Install a hydraulic pressure gauge (up to 3000 PSI) between the disconnected hydraulic hose and the pump port. The pressure gauge will indicate the relief valve setting when the pump is loaded.

3. Following the procedure in the Railgear Kit Operation and Service manual, raise the rear railgear completely and continue to raise the railgear so that the hydraulic cylinder creates a load on the pump by trying to "dead-head". The pressure reading on the pressure gauge should climb to 1800 PSI.

4. If the pressure is not correct, release the railgear controls and adjust the relief valve on the pump accordingly. Loosen the lock nut and turn the setscrew in to increase the pressure or out to decrease the pressure. Re-check the pressure.

5. Once the correct pressure on the pump relief valve is obtained, ensure the lock nut on the relief valve is tightened. Release the pressure in the system and remove the pressure gauge. Re-connect all hydraulic hoses.

6. Ensure the railgear is properly raised as per the Railgear Kit Operation, Service and Parts manual.

ELECTRICAL SYSTEM TROUBLESHOOTING

The following basic test can be performed to check the integrity of the railgear electrical system.

Should the railgear pump fail to operate, first check the fuse or the circuit breaker and all wiring for shorts. Then the following test can be performed to verify the integrity of the pump motor and pump solenoid.

1. Pump motor test:
   a) Connect one end of a 4 gauge shunt wire to the pump motor power terminal and touch the other end to the battery positive terminal.
   b) The pump motor should run upon touching the shunt wire.
   c) If the pump does not run, the pump is not properly grounded, or the pump motor is defective.
   d) If the pump motor runs, test for a defective solenoid.

2. Solenoid test:
   a) Connect one end of a 14 gauge shunt wire to the switching terminal on the solenoid and touch the other end to the battery positive terminal. If the pump does not operate the solenoid is not properly grounded or it is defective. If the pump operates, the problem lies with the fuse/circuit breaker, wiring and/or switches.

Should the pump start running immediately following turning on the respective dash switch, the following tests can be performed to help locate the problem.

1. Disconnect the wire from the switching terminal on the solenoid. If the pump continues to run, then the solenoid is defective.

2. Check all wiring and switches for shorts and / or loose terminals.

PARTS OF HYDRAULIC KIT

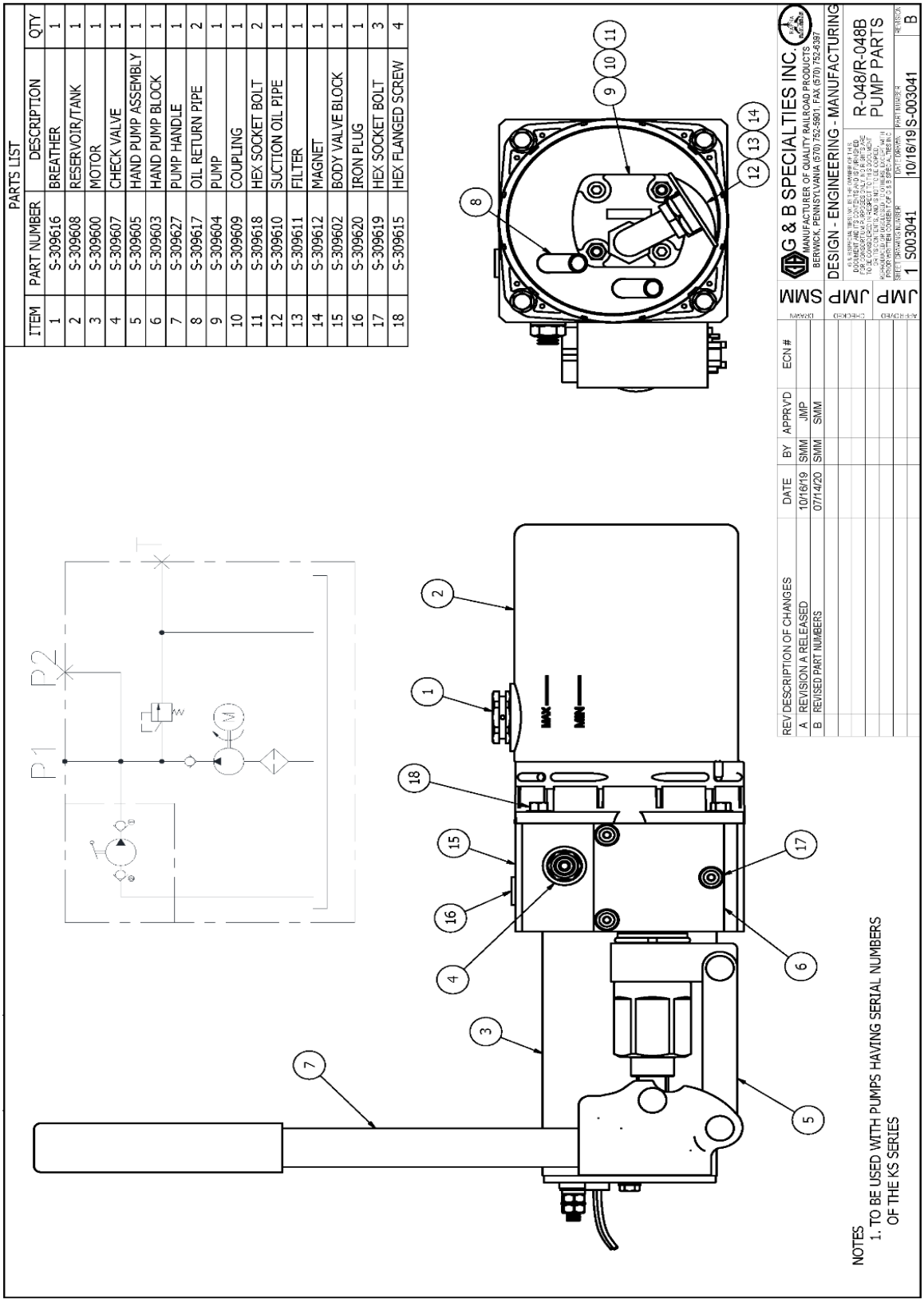

PARTS LIST

ITEM	PART NUMBER	DESCRIPTION	QTY
1	S-309616	BREATHER	1
2	S-309608	RESERVOIR/TANK	1
3	S-309600	MOTOR	1
4	S-309607	CHECK VALVE	1
5	S-309605	HAND PUMP ASSEMBLY	1
6	S-309603	HAND PUMP BLOCK	1
7	S-309627	PUMP HANDLE	1
8	S-309617	OIL RETURN PIPE	2
9	S-309604	PUMP	1
10	S-309609	COUPLING	1
11	S-309618	HEX SOCKET BOLT	2
12	S-309610	SUCTION OIL PIPE	1
13	S-309611	FILTER	1
14	S-309612	MAGNET	1
15	S-309602	BODY VALVE BLOCK	1
16	S-309620	IRON PLUG	1
17	S-309619	HEX SOCKET BOLT	3
18	S-309615	HEX FLANGED SCREW	4

PARTS LIST

ITEM	PART NUMBER	DESCRIPTION	QTY
1	S-309631	3W / 2P CARTRIDGE VALVE	4
2	S-309632	COIL	4
3	S-309630	PO CHECK CARTRIDGE VALVE	2
4	S-309629	MANIFOLD BODY	1
5	S-309638	STRAIN RELIEF ASSEMBLY	2
6	S-309639	PAN HEAD SCREW	4
7	S-309689	STRAIN RELIEF ASSEMBLY	1
8	S-309633	ALUMINUM WATERPROOF BOX ASSY	1
9	INCLUDED	ANTI-FALLING SCREW (INCLUDED IN S-309633)	4
10	INCLUDED	LID (INCLUDED IN S-309633)	1

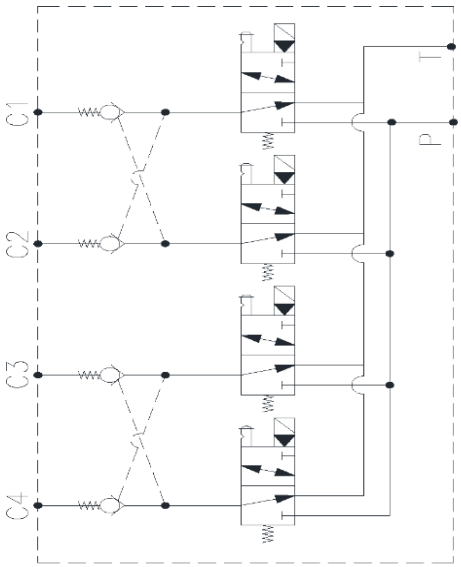

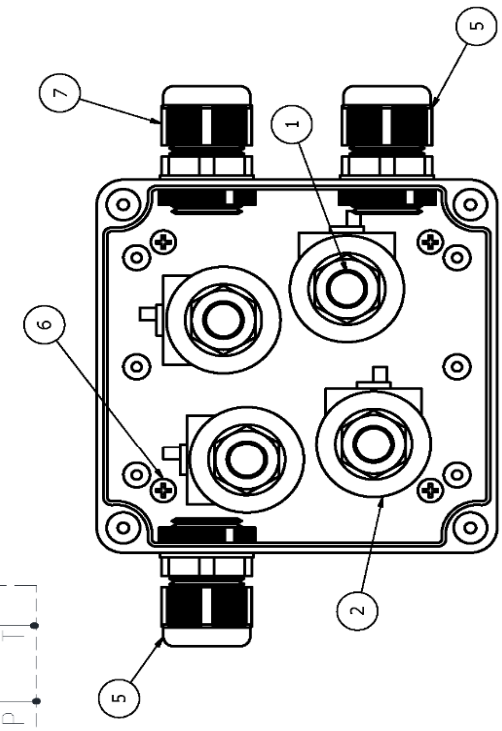

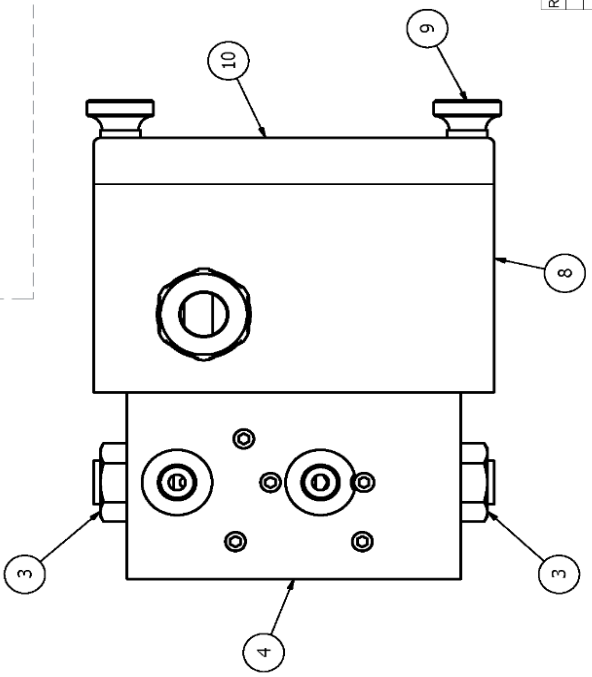

REV	DESCRIPTION OF CHANGES	DATE	BY	APPRV'D	ECN #
A	REVISION A RELEASED	10/17/19	SMM	JMP	
B	UPDATED PART NUMBERS	07/14/20	SMM	SMM	
C	UPDATED LID PART NUMBER	08/19/20	SMM	SMM	

DRAWN: SMM
CHECKED: JMP
APPROVED: JMP

G & B SPECIALTIES INC.
MANUFACTURER OF QUALITY RAILROAD PRODUCTS
BERWICK, PENNSYLVANIA (570) 752-5901, FAX (570) 752-6397

DESIGN - ENGINEERING - MANUFACTURING

R-048/R-048B
MANIFOLD
PARTS

SHEET | DRAWING NUMBER: 1 | S003042
DATE DRAWN: 10/17/19
PART NUMBER: S-003042
REVISION: C

PARTS LIST

ITEM	PART NUMBER	DESCRIPTION	QTY
1	S-309601	SOLENOID	1
2	S-309624	TERMINAL BOOT	1

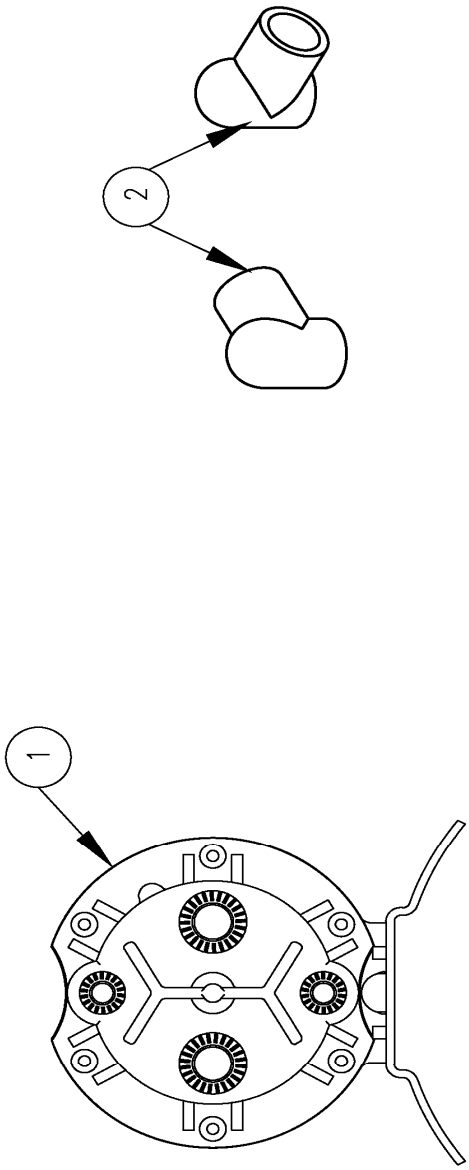

REV	DESCRIPTION OF CHANGES	DATE	BY	APPRV'D	ECN #
A	REVISION A RELEASED	10/18/19	SMM	JMP	

DRAWN SMM
CHECKED JMP
APPROVED JMP

G & B SPECIALTIES INC.
MANUFACTURER OF QUALITY RAILROAD PRODUCTS
BERWICK, PENNSYLVANIA (570) 752-5901, FAX (570) 752-6397

DESIGN - ENGINEERING - MANUFACTURING

G & B SPECIALTIES INC. IS THE OWNER OF THIS DOCUMENT AND ITS CONTENTS AND IS FURNISHED FOR CONFIDENTIAL USE ONLY. NO RIGHTS ARE TO BE CONSIDERED IN RESPECT TO THIS DOCUMENT OR ITS CONTENTS. NO PART OF THIS DOCUMENT REPRODUCED OR DISCLOSED TO OTHERS, EXCEPT WITH PRIOR WRITTEN CONSENT OF G & B SPECIALTIES INC

R-048/R-048B
MISC. PARTS

SHEET	DRAWING NUMBER	DATE	DRAWN	PART NUMBER	REVISION
1	MISCR048/B	10/17/19		MISCR048/B	A

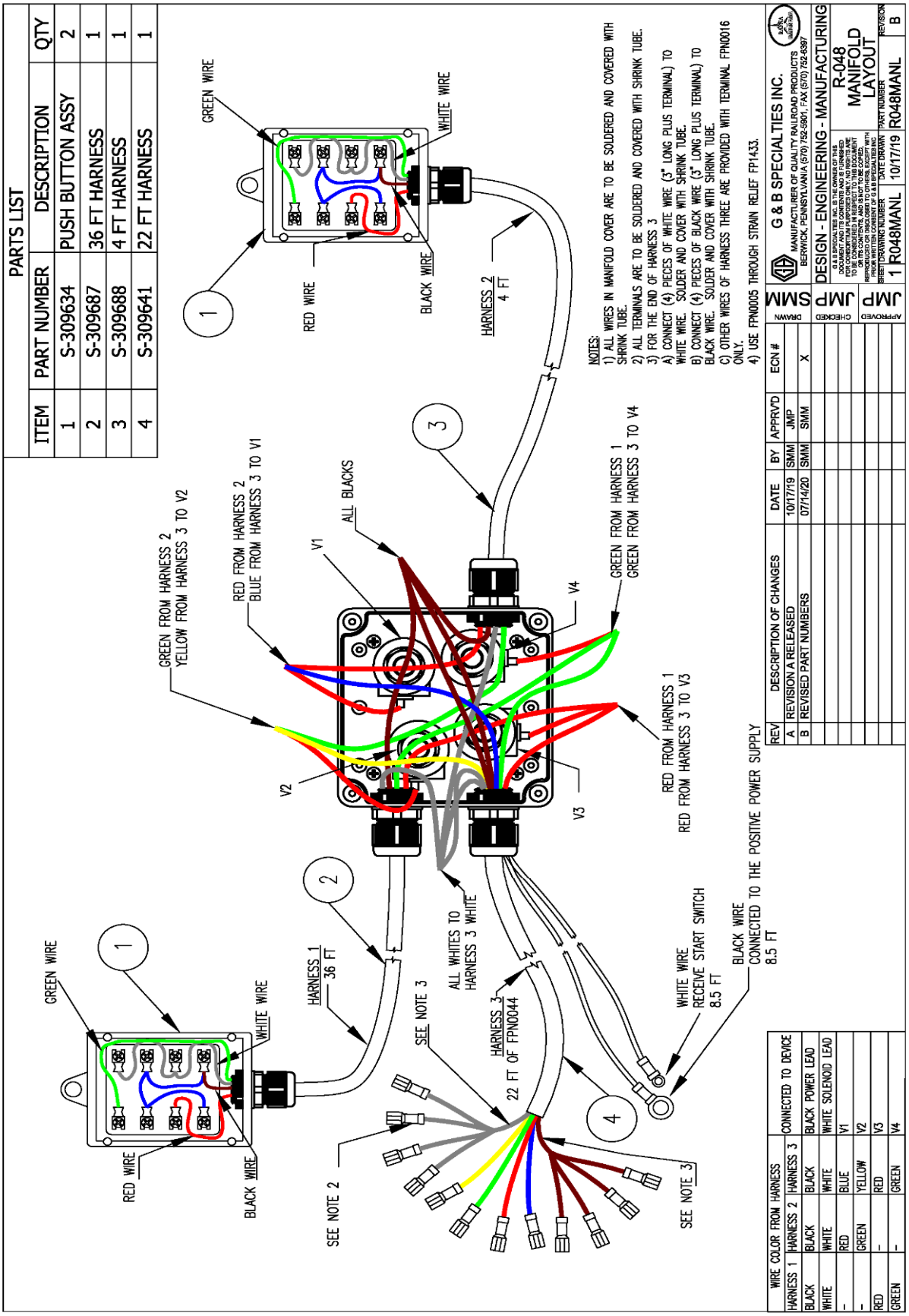
PARTS LIST
ITEM | PART NUMBER | DESCRIPTION | QTY
1 | S-309634 | PUSH BUTTON ASSY | 2
2 | S-309687 | 36 FT HARNESS | 1
3 | S-309688 | 4 FT HARNESS | 1
4 | S-309641 | 22 FT HARNESS | 1
NOTES:
1) ALL WIRES IN MANIFOLD COVER ARE TO BE SOLDERED AND COVERED WITH SHRINK TUBE.
2) ALL TERMINALS ARE TO BE SOLDERED AND COVERED WITH SHRINK TUBE.
3) FOR THE END OF HARNESS 3
A) CONNECT (4) PIECES OF WHITE WIRE (3" LONG PLUS TERMINAL) TO WHITE WIRE. SOLDER AND COVER WITH SHRINK TUBE.
B) CONNECT (4) PIECES OF BLACK WIRE (3" LONG PLUS TERMINAL) TO BLACK WIRE. SOLDER AND COVER WITH SHRINK TUBE.
C) OTHER WIRES OF HARNESS THREE ARE PROVIDED WITH TERMINAL FPN0016 ONLY.
4) USE FPN0005 THROUGH STRAIN RELIEF FP1433.
GREEN WIRE
WHITE WIRE
RED WIRE
BLACK WIRE
HARNESS 2
4 FT
HARNESS 1
36 FT
HARNESS 3
22 FT OF FPN0044
GREEN FROM HARNESS 2
YELLOW FROM HARNESS 3 TO V2
RED FROM HARNESS 2
BLUE FROM HARNESS 3 TO V1
ALL BLACKS
V1
V2
V3
V4
GREEN FROM HARNESS 1
GREEN FROM HARNESS 3 TO V4
RED FROM HARNESS 1
RED FROM HARNESS 3 TO V3
ALL WHITES TO
HARNESS 3 WHITE
SEE NOTE 3
SEE NOTE 2
WHITE WIRE
RECEIVE START SWITCH
8.5 FT
BLACK WIRE
CONNECTED TO THE POSITIVE POWER SUPPLY
8.5 FT
WIRE COLOR FROM HARNESS
HARNESS 1 | HARNESS 2 | HARNESS 3 | CONNECTED TO DEVICE
BLACK | BLACK | BLACK | BLACK POWER LEAD
WHITE | WHITE | WHITE | WHITE SOLENOID LEAD
- | RED | BLUE | V1
- | GREEN | YELLOW | V2
RED | - | RED | V3
GREEN | - | GREEN | V4
REV | DESCRIPTION OF CHANGES | DATE | BY | APPRV'D | ECN #
A | REVISION A RELEASED | 10/17/19 | SMM | JMP
B | REVISED PART NUMBERS | 07/14/20 | SMM | SMM | X
DRAWN SMM
CHECKED JMP
APPROVED JMP
G & B SPECIALTIES INC.
MANUFACTURER OF QUALITY RAILROAD PRODUCTS
BERWICK, PENNSYLVANIA (570) 752-5901, FAX (570) 752-6397
DESIGN - ENGINEERING - MANUFACTURING
R-048
MANIFOLD
LAYOUT
SHEET 1 DRAWING NUMBER R048MANL
DATE DRAWN 10/17/19
PART NUMBER R048MANL
REVISION B