INSTALLATION OF R-450 FRONT HYDRAULIC AXLE LOCK-UP KIT
2017 AND UP FORD F-450/F-550 4X4, 4X2

INSTALLATION SAFETY PRECAUTIONS

<u>If any installation problems are encountered, please call G&B Specialties for technical assistance before continuing with the installation process.</u>

CAUTION
WARNING

- Failure to heed to any of the following warnings could result in severe bodily injury and/or equipment damage.
- Read and understand this manual completely before attempting installation of the equipment.
- Installation instructions provided below only address the RAFNA railgear equipment. Applicable railway company procedures and policies must be adhered to.
- Before performing any work under the vehicle or railgear, ensure the engine is turned off and the parking brake is set.
- Do not start the vehicle with the power steering hoses disconnected. Reconnect all hoses and secure the power steering cooler if the vehicle is started.
- Ensure all removed components are given to the vehicle owner after the installation of the railgear. These components must be re-installed if the railgear is removed from the vehicle.
- Always disconnect the vehicle's battery when welding on the vehicle or railgear in order to protect the vehicle's electrical system.
- When routing hydraulic hoses, ensure that the hoses do not contact any sharp edges or hot surfaces.

INSTALLATION OF HYDRAULIC FRONT AXLE LOCK-UP KIT

The following procedure details the installation of the Hydraulic Operated Front Axle Lock Kit. The hardware required for this installation is listed in the table below.

Table 1: K-R45AVXFX006 (R-450 Hydraulic Front Axle Lock Kit)

Part Number	Description	# Req.
R-12029D	L-Bracket Weldment Drivers Side	1
R-12029P	L-Bracket Weldment Passengers Side	1
R-5635	Insulator Washer	4
R-12018	Spacer	2
R-12034D	Brkt Assy DS, Hydraulic Support	1
R-12034P	Brkt Assy PS, Hydraulic Support	1
R-4911	Bracket	2
R-4914	Hook Catch	2
R-12032	Washer, Fuel Cooler Spacer	1
R-18072C	Cylinder, Lockup	2
R-12035	Spacer, Cylinder	2
R-12040	Clevis, Cylinder	2
R-12041D	DS Hook, Hydraulic Axle Lockup	1
R-12041P	PS Hook, Hydraulic Axle Lockup	1
R-20161C	Fitting, 45 Elbow 1/4" JIC x 1/4" ORB	2
R-20161A	Fitting, 90 Elbow 1/4" JIC x 1/4" ORB	2
R-12043	Railgear Decal	1
R-12043A	Axle Lock Decal	1
R-990KIT-116AHYD	Washer, 1/4"	1
	Nylock Nut, UNC, 1/4"	1
	Hex Screw, UNC, 3/8” X 4” Lg	2
	Washer, SAE, 3/8”	13
	Nylock Nut, UNC, 3/8”	5
	Jam Nut, UNF, 7/16”	2
	Hex Screw, UNC, 1/2" X 2 1/4" Lg	2
	Washer, 1/2"	14
	Nylock Nut, UNC, 1/2"	4
	Hex Screw, UNC, 3/4" X 5" Lg	2
	Hex Screw, UNC, 3/4" X 5 1/2" Lg	2
	Washer, 3/4"	10
	Nylock Nut, UNC, 3/4"	6

The hydraulic front axle lock-up kit is to be positioned just rearward of the vehicle’s front suspension springs. Mounting holes in the hook hanger and bracket will align with some existing holes in the vehicle frame and suspension arm, respectively. The axle lock hook is designed to swing toward the front of the vehicle while disengaged for the road position and toward the rear of the vehicle while engaged for the rail position. The cylinder clevis is fastened to the hook and hydraulic hoses routed toward the front of the vehicle to the control valve which controls the hook position.

1. Remove fuel cooler from inside frame. Hoses should not have to be removed, just bolts taken out to be free of the frame. We will be using one of the existing mounting points for our bracket. Clip will need to be removed from square hole. See (Fig.4) for location.

2. Pop out wiring clips, grounding stud, etc. on top of the frame so that the bracket with sit flat on the frame. Brake clip and grounding stud are located on bracket for re-installation. Pop rivet can be removed from brake clip and installed on bracket with supplied hardware. See Fig. 6 for clip and pop rivet.

3. Find the slotted hole on top of the frame. Take bracket R-12029D (Driver's Side) and align the locating slug on the bracket with the slot in the frame. When done correctly, slug should drop into the slot on the frame and the bracket sit against the top and outer surfaces of the frame. See (Fig. 1).

4. With the bracket on the frame, center punch the slot on the bracket. Remove bracket and drill a 49/64" hole. Hole should line up with existing square hole where we removed the clip from earlier. Check with supplied 3/4" bolt to ensure bolt sits parallel and is not angled. Hole may need to be reamed to ensure this. The hole on the outside of the frame can also be obtained by drilling the square hole on the inside of the frame through to the outside. The bracket is slotted for this reason, just ensure bolt sits straight and not on an angle. Once hole is in place and bolt sits parallel, re-install fuel cooler leaving out the clip we removed. Install bracket to frame, using R-12032 and 3/4" hardware as show in Fig. 1. See Fig. 7 for proper install reference. (Passenger side will need the hole drilled through to the inside of the frame. There are no holes present on the passenger side.)

5. On the radius arm you will see a slotted hole with a hole next to it. Take R-4911 and place it on the radius arm with the larger hole in the bracket aligned with the slot, positioned closest to the hole side of the slot. See (Fig.5) Place 3/4" bolt that was supplied through the bracket and radius arm to help hold the bracket, and with the bracket against the bottom of the radius arm, mark the center of the small hole of the bracket on frame. You may also mark the center of the hole on the inside of the frame. Drill a 13/32" hole through the radius arm, or on the inside and outside where marked. With hole drilled, install bracket using the 3/4" and 3/8" hardware supplied in kit. See (Fig.1) for reference. Ensure not to over-tighten bolts and deform the radius arm.

6. Assemble the hook, R-12041D, and bracket, R-12034D, onto the all thread and stud as shown in Fig. 1. If lateral adjustment is required supplied spacer can be trimmed down, or washers can be added into assembly to maintain proper clearance with frame, suspension arm, and hook. Nylock nut should be tightened enough to secure hook, but not hinder it from swinging. (R-12041P and R-12034P will be used on Passenger's Side)

7. Once hook is installed, place the hydraulic cylinder spacer (R-12035) onto the threaded rod of the support bracket along with a 3/8” washer supplied in the hardware kit, and slide the hydraulic cylinder (R-18072C) onto the stud. (The washers act as shims, and more washers may need to be added to ensure cylinder sits properly and doesn’t bind. A regular 3/8” nut can be used during this process to allow for the nylock to be used during final installation if chosen to do so.) With the cylinder in its extended position, install the 7/16” jam nut on the end of the cylinder along with the cylinder clevis (R-12040). Adjust clevis so that it mates to the welded tab on the hook. Use the 1/2" x 2 1/4" bolt and hardware provided to secure clevis to the hook. (See Fig. 2) At this point, the cylinder should be fixed to the hook, and the hook hanging vertical. Ensure cylinder is on a straight line with mating to the hook, if not, add washers to the inside of the cylinder on the stud to shim it out until it is straight. Once the cylinder is straight, everything can now be tightened and the nylock nut used to secure the cylinder. (NOTE : cylinder will have a slight rotation on stud during operation, do not overtighten nut)

8. Repeat same process on passenger’s side of vehicle.

9. With the brackets and cylinders installed on both sides, install the R-20161A and R-20161C fittings in their proper ports. From here, reference the hydraulic manual included on how to properly hook up the hydraulic axle lock up.

10. Once the hydraulic system is operational, work the hook to ensure proper clearance and function. Make any adjustments, shimming, trimming etc. needed.

11. Extend the cylinder so that each hook is vertical, with the hooking surface horizontal. Position each hook catch (R-4914) on each bracket so that the vertical side of the hook just touches the forward-most part of the hook catch and there is a minimal gap between the bottom of the hook catch and the hooking surface. Weld each hook catch to each bracket using a 3/8” all around fillet weld. (See Fig. 3)

12. Test the stroke of each cylinder to ensure that each hook can be fully engaged and disengaged from the hook catch.

13. Paint all areas that were welded or heated.

14. Ensure that there is sufficient clearance between the front axle lock components and all vehicle components through their full range of motion.

15. Test the operation of the front axle lock.

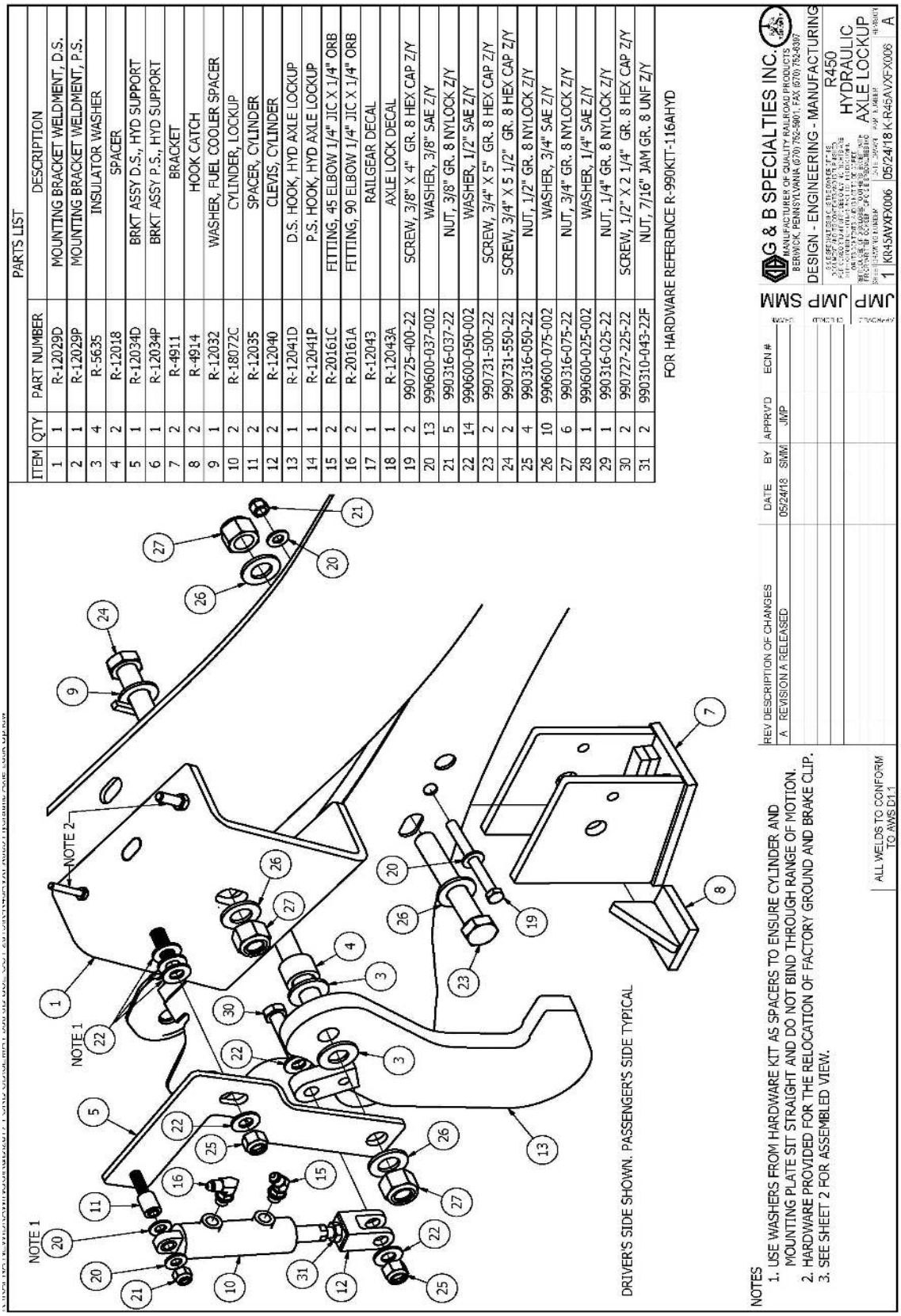

PARTS LIST

ITEM	QTY	PART NUMBER	DESCRIPTION
1	1	R-12029D	MOUNTING BRACKET WELDMENT, D.S.
2	1	R-12029P	MOUNTING BRACKET WELDMENT, P.S.
3	4	R-5635	INSULATOR WASHER
4	2	R-12018	SPACER
5	1	R-12034D	BRKT ASSY D.S., HYD SUPPORT
6	1	R-12034P	BRKT ASSY P.S., HYD SUPPORT
7	2	R-4911	BRACKET
8	2	R-4914	HOOK CATCH
9	1	R-12032	WASHER, FUEL COOLER SPACER
10	2	R-18072C	CYLINDER, LOCKUP
11	2	R-12035	SPACER, CYLINDER
12	2	R-12040	CLEVIS, CYLINDER
13	1	R-12041D	D.S. HOOK, HYD AXLE LOCKUP
14	1	R-12041P	P.S. HOOK, HYD AXLE LOCKUP
15	2	R-20161C	FITTING, 45 ELBOW 1/4" JIC X 1/4" ORB
16	2	R-20161A	FITTING, 90 ELBOW 1/4" JIC X 1/4" ORB
17	1	R-12043	RAILGEAR DECAL
18	1	R-12043A	AXLE LOCK DECAL
19	2	990725-400-22	SCREW, 3/8" X 4" GR. 8 HEX CAP Z/Y
20	13	990600-037-002	WASHER, 3/8" SAE Z/Y
21	5	990316-037-22	NUT, 3/8" GR. 8 NYLOCK Z/Y
22	14	990600-050-002	WASHER, 1/2" SAE Z/Y
23	2	990731-500-22	SCREW, 3/4" X 5" GR. 8 HEX CAP Z/Y
24	2	990731-550-22	SCREW, 3/4" X 5 1/2" GR. 8 HEX CAP Z/Y
25	4	990316-050-22	NUT, 1/2" GR. 8 NYLOCK Z/Y
26	10	990600-075-002	WASHER, 3/4" SAE Z/Y
27	6	990316-075-22	NUT, 3/4" GR. 8 NYLOCK Z/Y
28	1	990600-025-002	WASHER, 1/4" SAE Z/Y
29	1	990316-025-22	NUT, 1/4" GR. 8 NYLOCK Z/Y
30	2	990727-225-22	SCREW, 1/2" X 2 1/4" GR. 8 HEX CAP Z/Y
31	2	990310-043-22F	NUT, 7/16" JAM GR. 8 UNF Z/Y

FOR HARDWARE REFERENCE R-990KIT-116AHYD

Figure 1

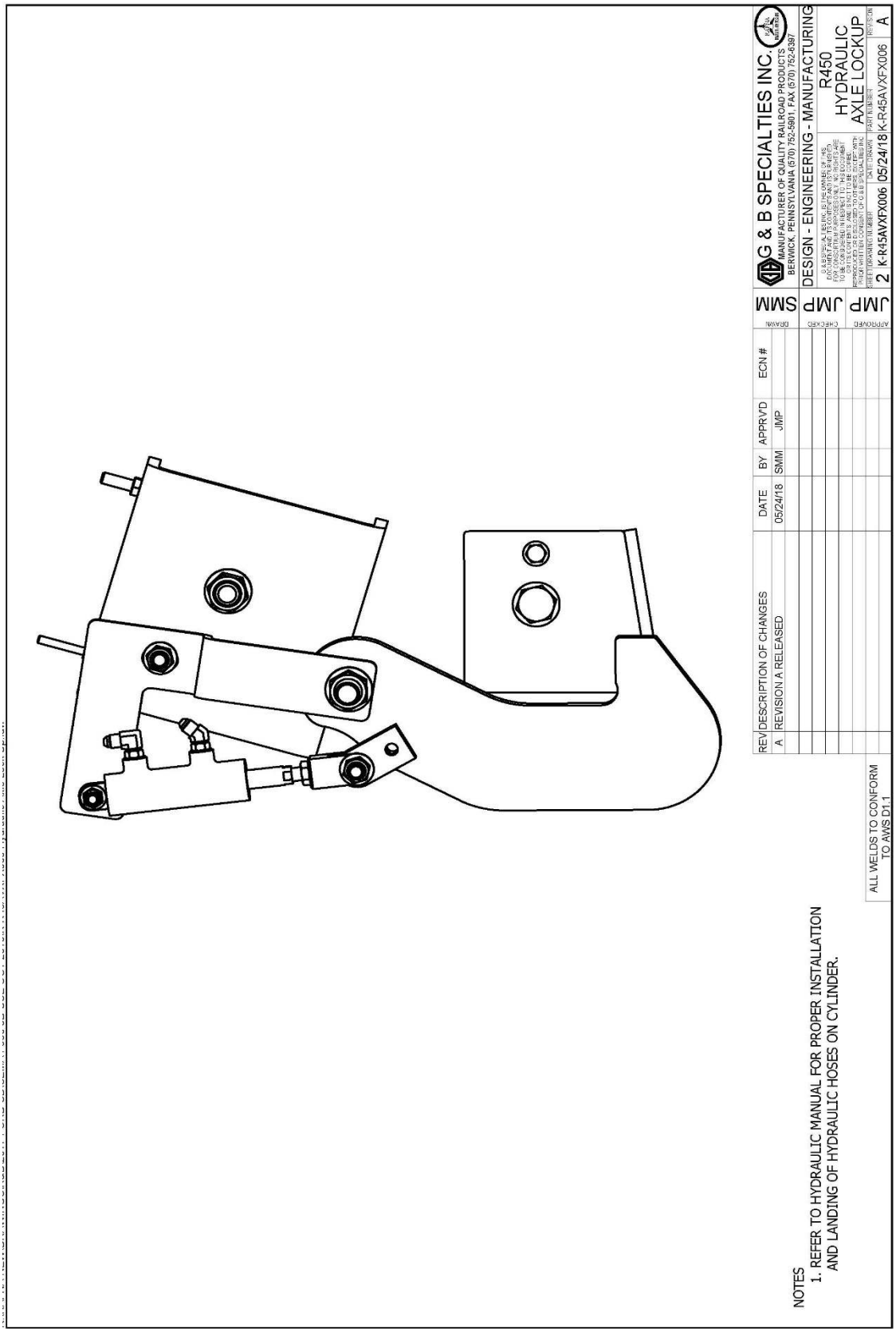
G & B SPECIALTIES INC.
MANUFACTURER OF QUALITY RAILROAD PRODUCTS
BERWICK, PENNSYLVANIA (570) 752-5901, FAX (570) 752-6397
DESIGN - ENGINEERING - MANUFACTURING
R450
HYDRAULIC
AXLE LOCKUP
2 K-R45AVXFX006 05/24/18 K-R45AVXFX006 A
REV DESCRIPTION OF CHANGES DATE BY APPRV'D ECN #
A REVISION A RELEASED 05/24/18 SMM JMP
DRAWN SMM
CHECKED JMP
APPROVED JMP
ALL WELDS TO CONFORM TO AWS D1.1
NOTES
1. REFER TO HYDRAULIC MANUAL FOR PROPER INSTALLATION AND LANDING OF HYDRAULIC HOSES ON CYLINDER.

Figure 2

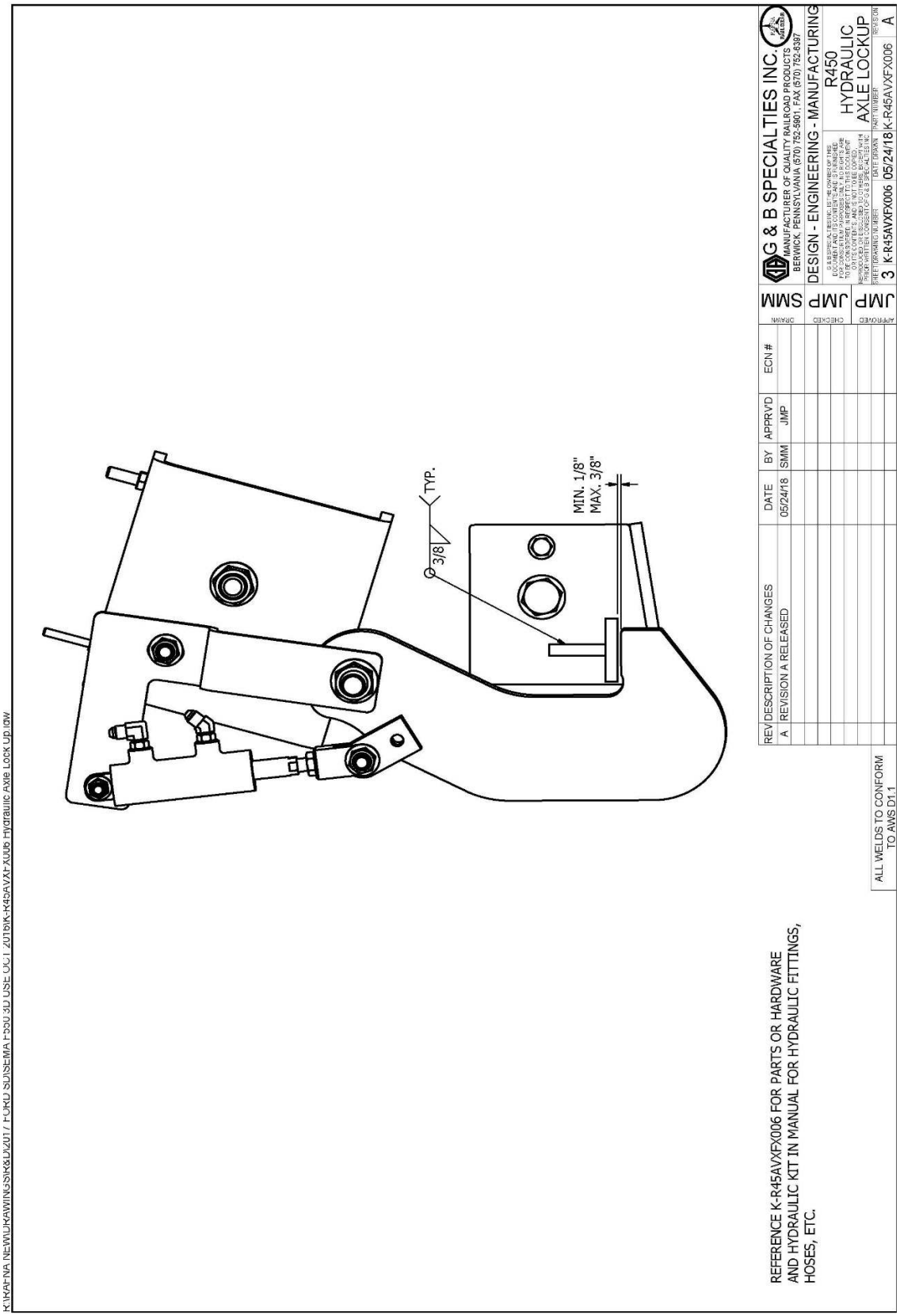
TYP.
3/8
MIN. 1/8"
MAX. 3/8"
REV DESCRIPTION OF CHANGES DATE BY APPRVD ECN #
A REVISION A RELEASED 05/24/18 SMM JMP
DRAWN SMM
CHECKED JMP
APPROVED JMP
G & B SPECIALTIES INC.
MANUFACTURER OF QUALITY RAILROAD PRODUCTS
BERWICK, PENNSYLVANIA (570) 752-5901, FAX (570) 752-6397
DESIGN - ENGINEERING - MANUFACTURING
R450
HYDRAULIC
AXLE LOCKUP
SHEET DRAWING NUMBER 3
PART NUMBER K-R45AVXFX006
REVISION A
DATE DRAWN 05/24/18
ALL WELDS TO CONFORM TO AWS D1.1
REFERENCE K-R45AVXFX006 FOR PARTS OR HARDWARE AND HYDRAULIC KIT IN MANUAL FOR HYDRAULIC FITTINGS, HOSES, ETC.

Figure 3

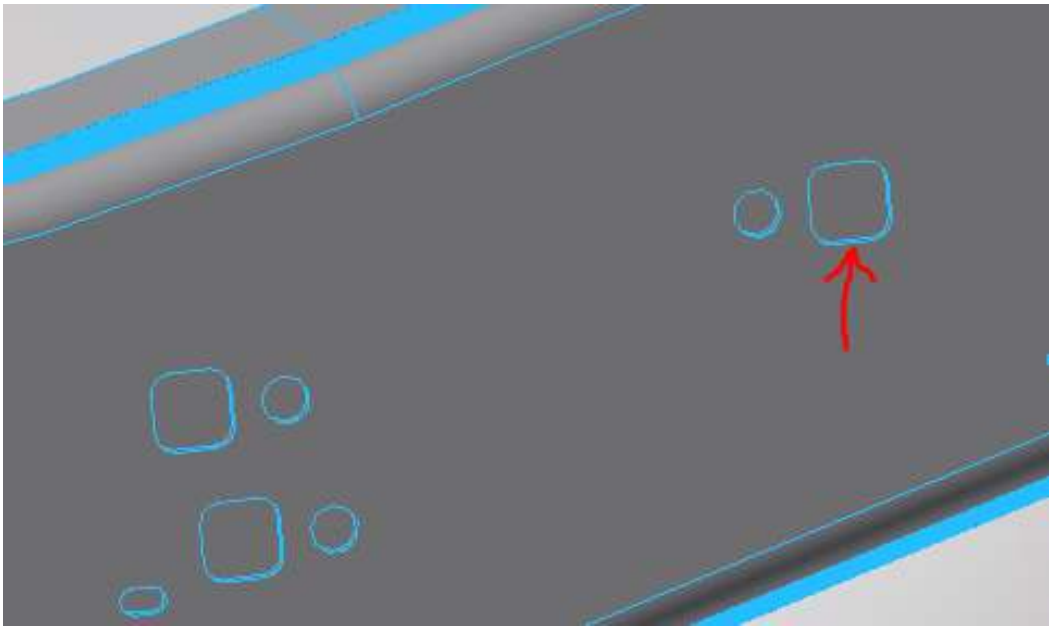

Figure 4

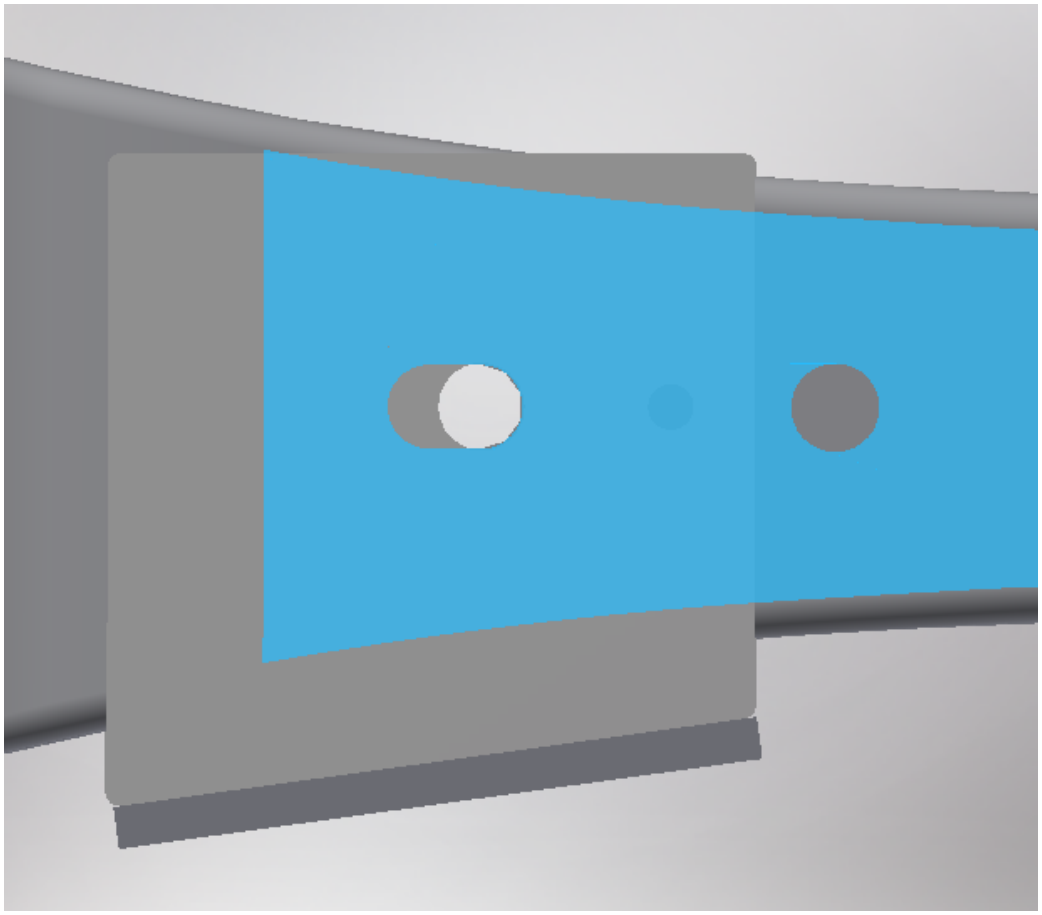

Figure 5

Figure 6

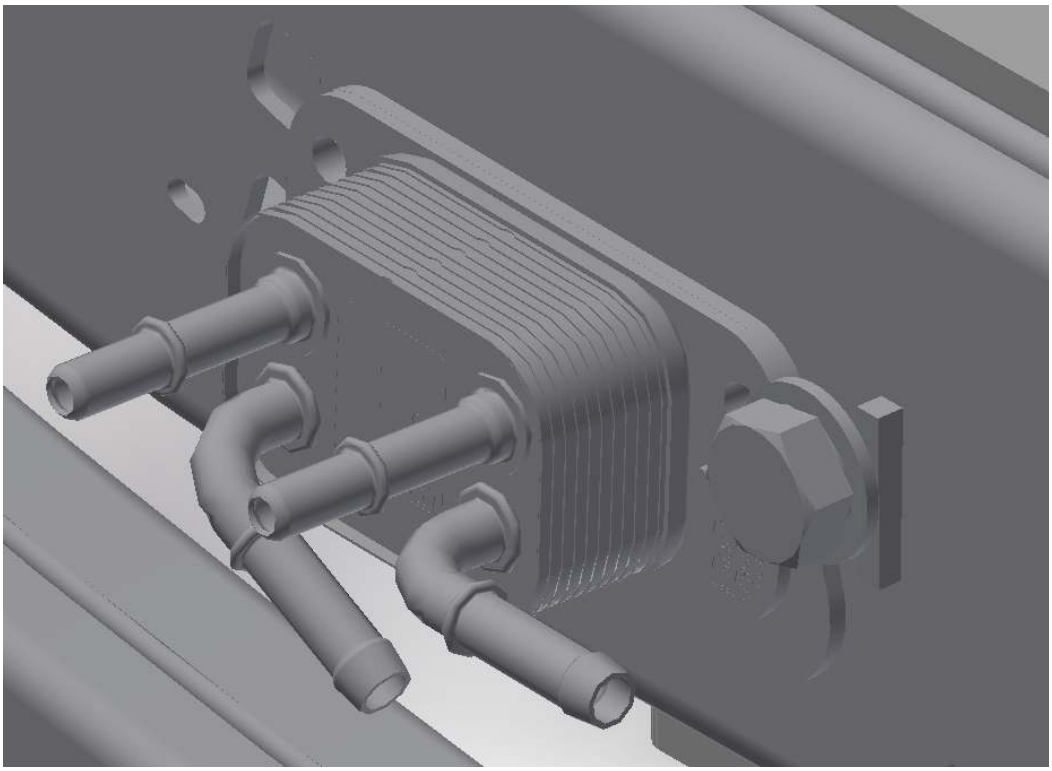

Figure 7

OPERATION OF R-450 HYDRAULIC FRONT AXLE LOCK KIT
2017 AND UP FORD F-450/F-550 4X4, 4X2

OPERATION SAFETY PRECAUTIONS

<u>If any installation problems are encountered, please call G&B Specialties for technical assistance before continuing with the installation process.</u>

CAUTION
WARNING

- Failure to heed to any of the following warnings could result in severe bodily injury and/or equipment damage.
- Read and understand this manual completely before attempting installation of the equipment.
- Installation instructions provided below only address the RAFNA railgear equipment. Applicable railway company procedures and policies must be adhered to.
- Before performing any work under the vehicle or railgear, ensure the engine is turned off and the parking brake is set.
- Do not start the vehicle with the power steering hoses disconnected. Reconnect all hoses and secure the power steering cooler if the vehicle is started.
- Ensure all removed components are given to the vehicle owner after the installation of the railgear. These components must be re-installed if the railgear is removed from the vehicle.
- Always disconnect the vehicle's battery when welding on the vehicle or railgear in order to protect the vehicle's electrical system.
- When routing hydraulic hoses, ensure that the hoses do not contact any sharp edges or hot surfaces.

HYDRAULIC FRONT AXLE LOCK OPERATION

With the Front Axle Lock kit installed on this vehicle, it may be operated as normal.

Never operate the vehicle if the Gross Vehicle Weight Rating (GVWR), Gross Axle Weight Rating Front or Rear (GAWR), or the wheel or tire load ratings are exceeded.

Refer to the Railgear Kit Operation, Service and Parts manual for information on the mechanical operation, service and parts of the railgear.

PLACING VEHICLE ON RAIL

1. Grasp the proper control valve lever for the axle lock-up located at the front of the vehicle. (Lever will control both axle lock-up hooks) Push lever to engage axle lock-up hooks.
2. Visually inspect that both axle lock-up hooks have fully engaged the hook catches welded to the front suspension arms.
3. Proceed to lower the front railgear unit.
4. As the front rail wheels engage the rail, the front of the vehicle will begin to rise.
5. Continue to lower the front railgear unit until the cylinders are fully extended and the railgear lock up hook has engaged.
6. With the front railgear unit in the fully locked rail position, the front tires should be minimally 1.5” or otherwise specified above the rail head.

REMOVING VEHICLE FROM RAIL

1. Disengage the railgear lock and raise the railgear to the full locked road position.
2. Grasp the proper control valve lever for the axle lock-up located at the front of the vehicle. (Lever will control both axle lock-up hooks) Pull lever to disengage axle lock-up hooks.
3. Visually inspect that both axle lock-up hooks have fully retracted from the hook catches welded to the front suspension arms.

HYDRAULIC FRONT AXLE LOCK-UP ADJUSTMENT

The hydraulic front axle lock-up is adjusted when the vehicle is resting on its tires in its minimum loaded condition with the railgear in the **road** position and the axle lock engaged. For the axle lock to function properly, there are three adjustments to be made:

1. There should be a clearance of 1/8” to 3/8” between the hooking surface of each hook and hook catch. If the clearance is larger than 3/8”, steel shims can be welded to the bottom of the hook catch. If the clearance is less than 1/8”, any previously installed shims can be removed. If there are no shims to remove, the hook catch can be cut off the bracket and re-welded higher up on the bracket using a 3/8” all around fillet weld.

2. The rear vertical edge of each hook should rest flat against the forward edge of the hook catch when the axle lock is fully engaged. This can be adjusted by cutting the hook catch off the bracket and re-welding it in place using a 3/8” all around fillet weld.

3. Each hook must clear the suspension arm by at least 1/2" through its full range of motion. The hooks can be moved inboard and outboard on the hook hanger pivot post by adjusting the number of plastic washers on each side of the hook. The hook can also be adjusted by how far the cylinder clevis is screwed onto the cylinder.

4. Paint all welded areas after the axle lock is properly adjusted.

5. Ensure that there is sufficient clearance between the front axle lock components and all vehicle components through their full range of motion.

SERVICE OF HYDRAULIC FRONT AXLE LOCK KIT

The Axle Lock kit must be serviced regularly to avoid damage to the equipment. Table 1 below provides the Recommended Service Schedule and Table 2 provides Standard Fastener Torque Values.

Table 1: Recommended Service Schedule

Service Required	Daily	Weekly	Monthly	3 Months	6 Months
Inspect front axle lock fasteners (re-torque if required)	✓	✓	✓	✓	✓
Inspect hydraulic fittings and check for hydraulic leaks	✓	✓	✓	✓	✓
Check / adjust front axle lock hook clearance (see procedure)					✓

Table 2: Standard Fastener Torque Value	
Fastener Size	**Fastener Torque Value (ft-lbs) Dry**
1” UNC Gr. 8 Fasteners	250
¾” UNC Gr. 8 Fasteners	175
$^{5}/_{8}$” UNC Gr. 8 Fasteners	150
½” UNC Gr. 8 Fasteners	100
$^{3}/_{8}$” UNC Gr. 8 Fasteners	40
¼” UNC Gr. 8 Fasteners	12