INSTALLATION OF R-450 ROTATING REAR RAILGEAR KIT
Ford F-450/550 All Models

INSTALLATION SAFETY PRECAUTIONS

<u>If any installation problems are encountered, please call G&B Specialties, Inc. for technical assistance before continuing with the installation process.</u>

CAUTION
WARNING

- Failure to heed to any of the following warnings could result in severe bodily injury and/or equipment damage.
- Read and understand this manual completely before attempting installation and operation of the equipment.
- Installation and operation instructions provided below only address the G&B Specialties railgear equipment. Applicable railway company procedures and policies must be adhered to.
- Before performing any work under the vehicle or railgear, ensure that the engine is turned off and the parking brake is set.
- Beware of all pinch points on the railgear and keep all parts of the body clear.
- Always disconnect the vehicle's battery when welding on the vehicle or railgear in order to protect the vehicle's electrical system.
- Railway company rules governing rail travel must be observed at all times.
- Ensure that the position and function of all railgear controls are known before attempting operation.
- Ensure the railgear is locked in road position before starting road travel.
- Ensure all body parts and loose clothing are clear of any moving parts of the equipment.
- If misalignment of the railgear equipment is indicated, promptly perform the alignment procedure.
- Before performing any work under the vehicle or railgear, ensure the engine is turned off and the parking brake is set.
- Never operate the vehicle if the Gross Vehicle Weight Rating (GVWR), Gross Axle Weight Rating Front or Rear (GAWR), or the wheel or tire load ratings are exceeded.

REAR RAILGEAR KIT

The following procedure details the installation of the rear railgear kit. The hardware required for the different kits are listed in the tables below.

Table 1: K-R45XRFR4836CBL (R-450 Rotating Rear Railgear with Cable Actuated Lock-up)

Part Number	Description	Qty
R-4836G	Rotating Rear Railgear	1
R-4836GBRZ	Rotating Rear Railgear (Bronze Bushings)	
R-4837E	Axle Lock-up Assembly	1
R-001	10" Wheel Assembly	2
R-4646R	Rail Sweep Right Side	1
R-4646L	Rail Sweep Left Side	1
R-4838	Push/Pull Cable	1
S-001031	Railgear Operation Decal	1
R-990KIT-204 Rail Wheel Mounting	1/2" UNC Gr. 8 Bolt x 2.25" Long	8
	1/2" Gr. 8 Washer	16
	1/2" UNC Gr. 8 Nylon Insert Lock Nut	8
R-990KIT-021 Rail Gear Mounting	5/8" UNC Gr. 8 Bolt x 2" Long	6
	5/8" Gr. 8 Washer	12
	5/8" UNC Gr. 8 Nylon Insert Lock Nut	6
	3/4" UNC Gr. 8 Bolt x 2.25" Long	4
	3/4" Gr. 8 Washer	8
	3/4" UNC Gr. 8 Nylon Insert Lock Nut	4

Table 2: K-R45XRFR4836LVR (R-450 Rotating Rear Railgear with Lever Actuated Lock-Up)

Part Number	Description	Qty
R-4836G	Rotating Rear Railgear	1
R-4836GBRZ	Rotating Rear Railgear (Bronze Bushings)	
R-4837B	Axle Lock-up Assembly	1
K-R45XXRX4836	Lever Lock-up Kit	1
R-001	10" Wheel Assembly	2
R-4646R	Rail Sweep Right Side	1
R-4646L	Rail Sweep Left Side	1
S-001031	Railgear Operation Decal	1
R-990KIT-204 Rail Wheel Mounting	1/2" UNC Gr. 8 Bolt x 2.25" Long	8
	1/2" Gr. 8 Washer	16
	1/2" UNC Gr. 8 Nylon Insert Lock Nut	8
R-990KIT-021 Rail Gear Mounting	5/8" UNC Gr. 8 Bolt x 2" Long	6
	5/8" Gr. 8 Washer	12
	5/8" UNC Gr. 8 Nylon Insert Lock Nut	6
	3/4" UNC Gr. 8 Bolt x 2.25" Long	4
	3/4" Gr. 8 Washer	8
	3/4" UNC Gr. 8 Nylon Insert Lock Nut	4

INSTALLATION OF REAR RAILGEAR

Note

The axle lock-up assemblies for these units has been pre-installed at the factory prior to shipping, it will be necessary to install the push/pull cable or Lever Lock-up Kit during vehicle installation. The procedure for installing the cable and lever can be located in the installation section of this manual.

Note:

The following procedure details the installation of the rotating rear railgear kit. The hardware required for each installation is listed in the tables above.

The type of rear lock-up installed on this unit has no effect on installation. The installation procedure below is typical for all R-450 Rotating Rear Units.

1. To install the railgear at the correct height, ensure that the road wheels and tires have been installed on the vehicle and that the vehicle is resting on its properly inflated tires.

2. Position and support the railgear so that the railgear mounting boxes are on either side of the rear of the vehicle frame with the blind end of the hydraulic cylinders facing the rear of the vehicle. The mounting boxes should be flush with the rear of the vehicle frame and fit around the vehicle's suspension hangers. The holes in the mounting boxes should align with existing holes in the vehicle frame. It may be necessary to loosen or remove the 1/2" fasteners that support the railgear lock system to be able to fit the railgear on the frame. Once the railgear is on the frame, tighten and torque the 1/2" fasteners securing the railgear lock system to the railgear to 100 ft-lbs dry. Do not over torque.

3. Ensure that there is approximately 21.5" between the railgear-to-mounting box interface and the ground as shown. If this height cannot be achieved, the vehicle suspension will need to be modified. This modification is not included with the RAFNA railgear.

4. Fasten each railgear mounting box to the vehicle frame using three 5/8" x 2" long bolts, six 5/8" washers and three 5/8" nuts through the existing frame holes at the rear as shown.

5. Using the front-most hole in each railgear mounting box as a guide, drill a 25/32" hole through the vehicle frame.

6. Fasten each railgear mounting box to the vehicle frame using two 3/4" x 2.25" long bolts, four 3/4" washers and two 3/4" nuts through the drilled hole and the existing hole as shown.

7. Torque the 5/8" fasteners to 150 ft-lbs dry and the 3/4" fasteners to 175 ft-lbs dry. Do not over torque.

8. Place the rail wheels below the mounting tables on the railgear axle. Place the rail sweeps to the rear of the rail wheels and on top of the mounting tables. Fasten the rail wheels and rail sweeps to the mounting tables with eight 1/2" x 2.25" long bolts, sixteen 1/2" washers and eight 1/2" nuts.

9. Tighten but do not torque the 1/2” fasteners as they will be torqued following the railgear alignment procedure.

Proceed to install the railgear hydraulic system as per the Hydraulic Kit Installation manual before continuing with the following steps.

10. Follow the Rail Wheel Load Adjustment procedure detailed in the R-450 Rotating Rear Railgear Kit Operation, Service and Parts manual.

11. Follow the Railgear Alignment procedure detailed in the R-450 Rotating Rear Railgear Kit Operation, Service and Parts manual.

12. Follow the Railgear Lock System Installation/Adjustment Procedure detailed in the Railgear Lock System Installation/Adjustment section of this manual.

13. Follow the Rail Sweep Adjustment procedure detailed in the R-450 Rotating Rear Railgear Kit Operation, Service and Parts manual.

14. Torque all fasteners as detailed in the R-450 Rotating Rear Railgear Kit Operation, Service and Parts manual.

15. Grease the railgear at all lubrication points as detailed in the R-450 Rotating Rear Railgear Kit Operation, Service and Parts manual.

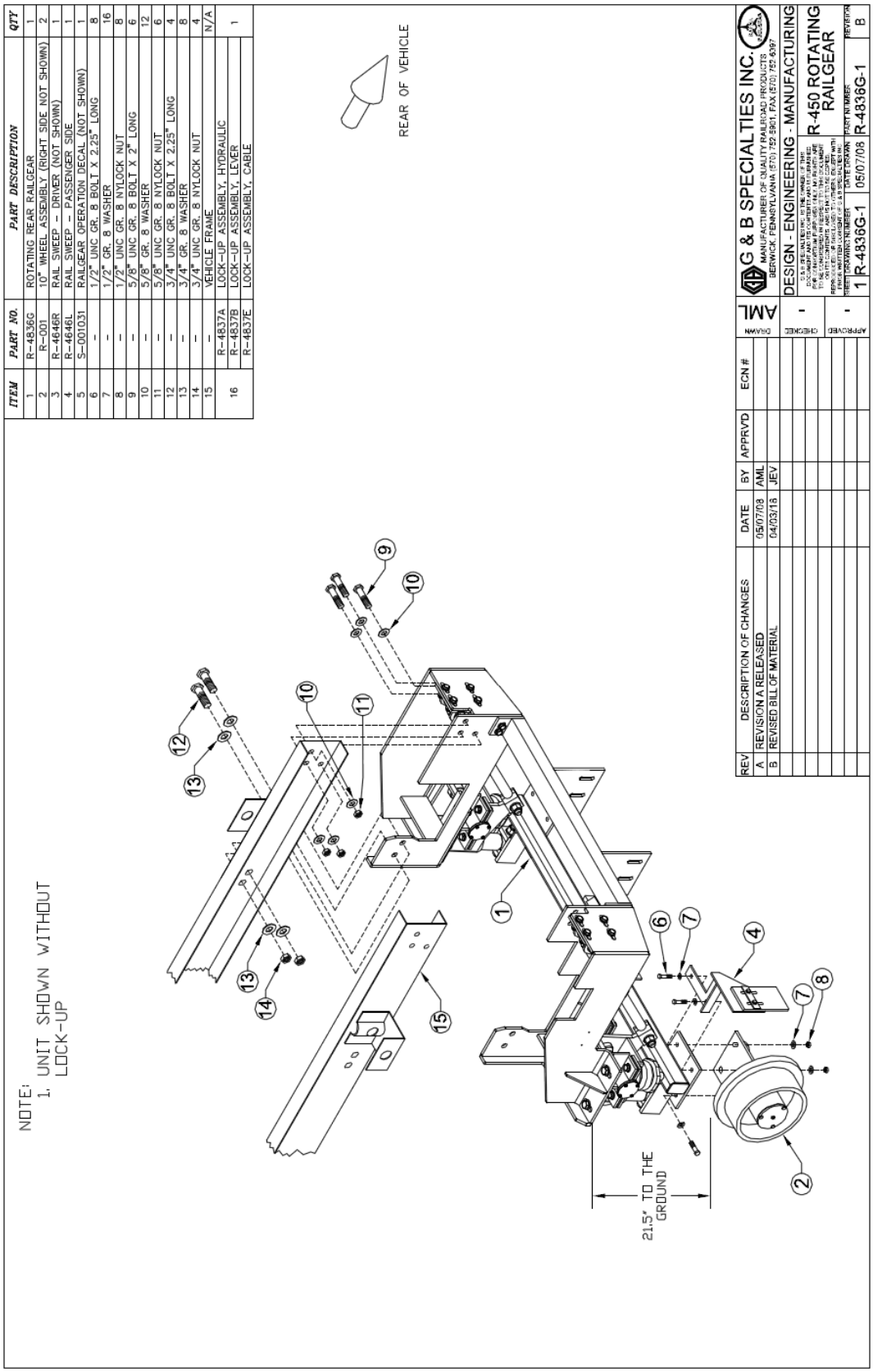

ITEM	PART NO.	PART DESCRIPTION	QTY
1	R-4836G	ROTATING REAR RAILGEAR	1
2	R-001	10" WHEEL ASSEMBLY (RIGHT SIDE NOT SHOWN)	2
3	R-4646R	RAIL SWEEP - DRIVER (NOT SHOWN)	1
4	R-4646L	RAIL SWEEP - PASSENGER SIDE	1
5	S-001031	RAILGEAR OPERATION DECAL (NOT SHOWN)	1
6	-	1/2" UNC GR. 8 BOLT X 2.25" LONG	8
7	-	1/2" GR. 8 WASHER	16
8	-	1/2" UNC GR. 8 NYLOCK NUT	8
9	-	5/8" UNC GR. 8 BOLT X 2" LONG	6
10	-	5/8" GR. 8 WASHER	12
11	-	5/8" UNC GR. 8 NYLOCK NUT	6
12	-	3/4" UNC GR. 8 BOLT X 2.25" LONG	4
13	-	3/4" GR. 8 WASHER	8
14	-	3/4" UNC GR. 8 NYLOCK NUT	4
15	-	VEHICLE FRAME	N/A
16	R-4837A	LOCK-UP ASSEMBLY, HYDRAULIC	1
	R-4837B	LOCK-UP ASSEMBLY, LEVER	
	R-4837E	LOCK-UP ASSEMBLY, CABLE	

Figure 1

REAR LOCK-UP CABLE INSTALLATION PROCEDURE

For units equipped with a cable lock-up mechanism, use the following steps to install lock-up:

1. Remove lock-up cover.
2. Install the rear lock cable to the locking system by fastening the end of the cable through the cable support, then thru the pipe on the locking cable bar at the center of the railgear lock system as shown.
3. Fabricate and install a bracket to hold the lock cable handle. Ensure that the handle will be mounted near the railgear controls.
4. Install lock-up cover on rear lock-up assembly. Torque ¼" fasteners to 12 ft-lbs dry.
5. Follow the railgear lock system adjustment procedure.

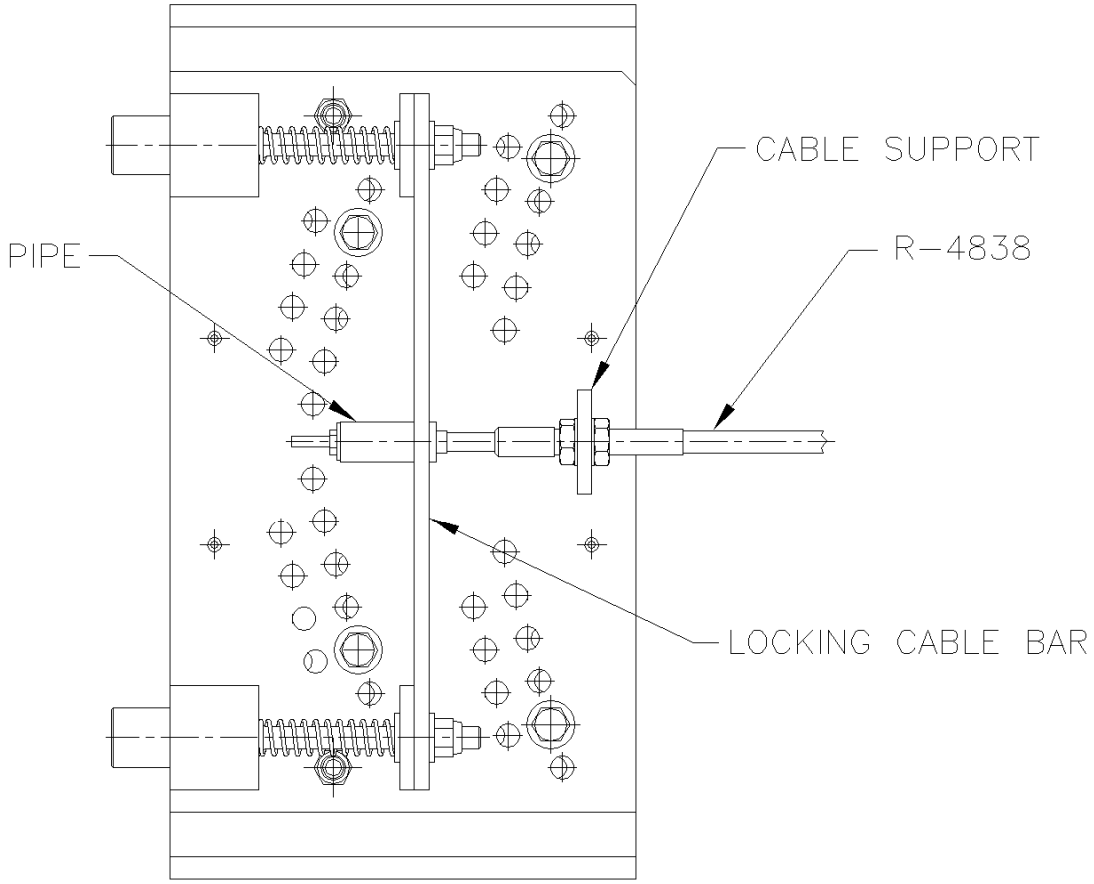

REAR LOCK-UP ASSEMBLY
CABLE ACTUATED

Figure 2

REAR LOCK-UP LEVER INSTALLATION PROCEDURE

For units equipped with a lever lock-up mechanism, use the following steps to install lock-up:

Table 1: K-R45XXRX4836 (R-450 Rotating Rear Manual Lever Lockup Kit)

Part Number	Description	Qty
R-4837B	Axle Lockup Assembly (Assembled on Railgear)	1
R-18109	Rod Support	1
R-18108	Lockup Rod	1
R-18107	Clevis	1
R-18106	Handle	1
R-990KIT-228	1/2"-13 UNC GR.8 Bolt x 3.50" Long	1
	1/2" Flat Washer, Type-A GR. 8	2
	1/2" - 13 UNC Nylock Nut, GR. 8	1
	3/8" Flat Washer, Type-A GR. 8	1
	3/8" - 16 UNC Hex Nut GR. 8	1
	3/8" - 16 UNC Nylock Nut, GR. 8	1

1. Remove lock-up cover.

2. Fasten the clevis (R-18107) to the threaded Lockup Rod (R-18108) with the short-threaded end using a 3/8” hex nut to secure the clevis.

3. Remove the cotter pin on the clevis and clevis pin and fasten the handle (R-18106) to the clevis using the clevis pin and cotter pin that were just removed as shown.

4. Insert the Lockup Rod that is attached to the handle into the spring plate and fasten the handle to the rod support (R-18109) using one ½” x 3-1/2” bolt, two ½” washers, and a ½” nylock nut as shown.

Do not over tighten the nylock nut or the handle will be hard to move or may not move at all. Handle will need to be removed for bending and/or trimming for desired location.

5. Adjust the rod support up or down by loosening the bolts and nuts that hold the rod support so that the handle is parallel with the ground and tighten the ½” bolts and nylock nuts that hold the rod support.

6. Place one 3/8” washer and nylock nut on the end of the lockup rod as shown. Use a 5/16 wrench to keep the lockup rod from turning when fastening the nylock nut.

7. Move the handle to the desired location making sure nothing will be in the way when engaging the lockup and tighten the nylock nut so the 3/8” washer is against the spring plate.

8. Test the lockup to ensure proper functionality.

9. Bend and/or trim the handle to desired location.

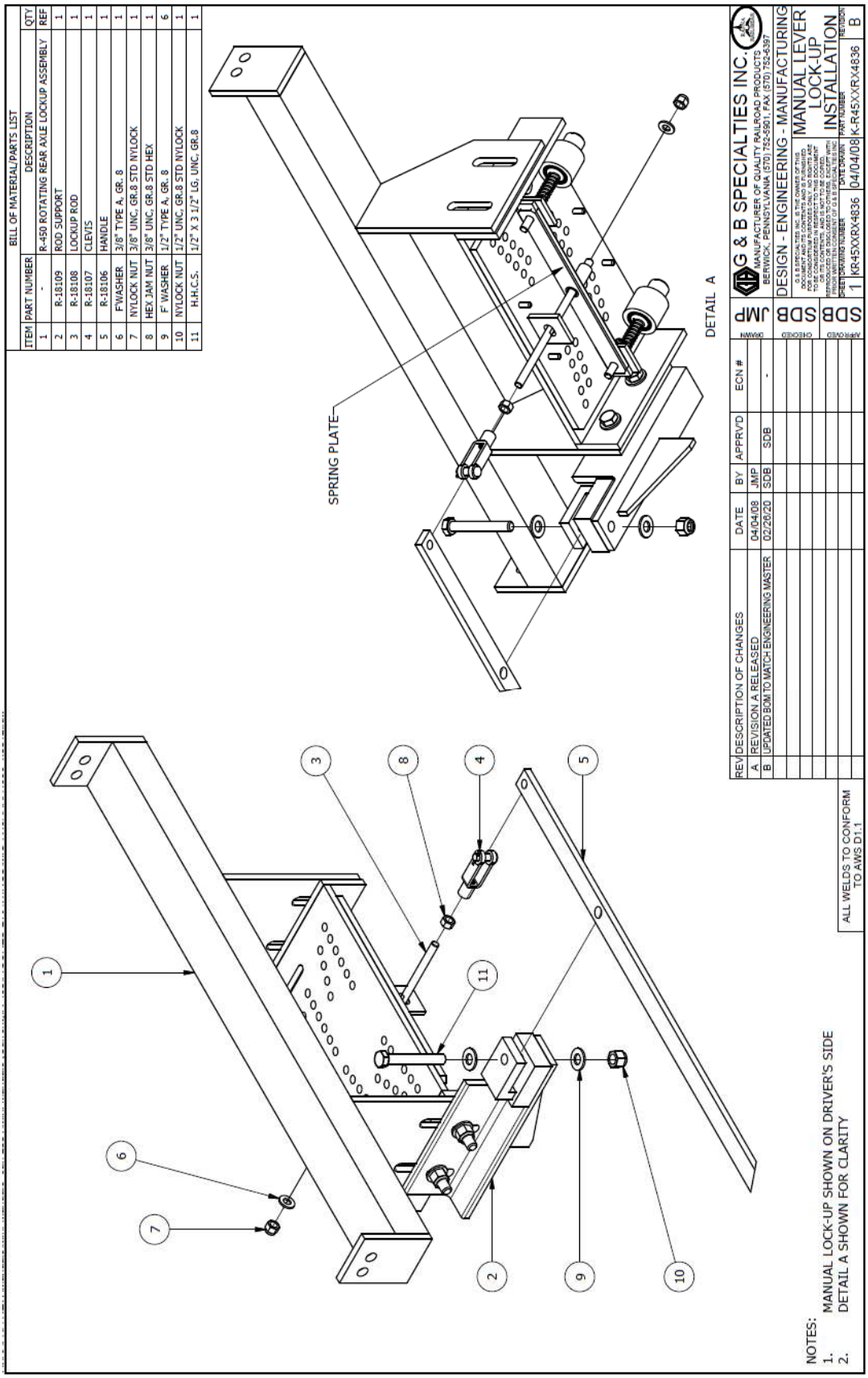
BILL OF MATERIAL/PARTS LIST
ITEM PART NUMBER DESCRIPTION QTY
1 - R-450 ROTATING REAR AXLE LOCKUP ASSEMBLY REF
2 R-18109 ROD SUPPORT 1
3 R-18108 LOCKUP ROD 1
4 R-18107 CLEVIS 1
5 R-18106 HANDLE 1
6 F WASHER 3/8" TYPE A, GR. 8 1
7 NYLOCK NUT 3/8" UNC, GR-8 STD NYLOCK 1
8 HEX JAM NUT 3/8" UNC, GR-8 STD HEX 1
9 F WASHER 1/2" TYPE A, GR. 8 6
10 NYLOCK NUT 1/2" UNC, GR-8 STD NYLOCK 1
11 H.H.C.S. 1/2" X 3 1/2" LG, UNC, GR-8 1
SPRING PLATE
DETAIL A
REV DESCRIPTION OF CHANGES DATE BY APPRV'D ECN #
A REVISION A RELEASED 04/04/08 JMP
B UPDATED BOM TO MATCH ENGINEERING MASTER 02/26/20 SDB -
DRAWN JMP
CHECKED SDB
APPR'D/DATE SDB
G & B SPECIALTIES INC.
MANUFACTURER OF QUALITY RAILROAD PRODUCTS
BERWICK, PENNSYLVANIA (570) 752-5901, FAX (570) 752-6397
DESIGN - ENGINEERING - MANUFACTURING
MANUAL LEVER LOCK-UP INSTALLATION
SHEET 1
DRAWING NUMBER KR45XXRX4836
DATE DRAWN 04/04/08
PART NUMBER K-R45XXRX4836
REVISION B
ALL WELDS TO CONFORM TO AWS D1.1
NOTES:
1. MANUAL LOCK-UP SHOWN ON DRIVER'S SIDE
2. DETAIL A SHOWN FOR CLARITY

OPERATION OF R-450 ROTATING REAR RAILGEAR KIT
Ford F-450/550 All Models

OPERATION SAFETY PRECAUTIONS

<u>If any operating, services, or parts problems are encountered, please call G&B Specialties, Inc. for technical assistance.</u>

CAUTION
WARNING

- Failure to heed to any of the following warnings could result in severe bodily injury and/or equipment damage.
- Read and understand this manual completely before attempting operation of the railgear equipped vehicle.
- Operating instructions provided below only address the RAFNA railgear equipment. Applicable railway company procedures and policies must be adhered to.
- Railway company rules governing rail travel must be observed at all times.
- Ensure that the position and function of all railgear controls are known before attempting operation.
- Ensure the railgear is locked in road or rail position before starting road or rail travel respectively.
- Ensure all body parts and loose clothing are clear of any moving parts of the equipment.
- If misalignment of the railgear equipment is indicated, promptly perform the alignment procedure.
- Before performing any work under the vehicle or railgear, ensure the engine is turned off and the parking brake is set.
- Never operate the vehicle if the Gross Vehicle Weight Rating (GVWR), Gross Axle Weight Rating Front or Rear (GAWR), or the wheel or tire load ratings are exceeded.
- Always disconnect the vehicle's battery when welding on the vehicle or railgear in order to protect the vehicle's electrical system.

OPERATION OF ROTATING REAR RAILGEAR

With the railgear kit installed on this vehicle, it may be operated as normal, however the vehicle has decreased ground clearance and angles of approach and departure due to the railgear. Caution must be used when operating the vehicle.

Never operate the vehicle if the Gross Vehicle Weight Rating (GVWR), Gross Axle Weight Rating Front or Rear (GAWR), or the wheel or tire load ratings are exceeded.

Refer to the Hydraulic Kit Operation, Service, and Parts manual for information on the location and operation of the railgear hydraulic system controls.

Placing the Vehicle on Rail – To Lower the Railgear:

1. Disengage the mechanical locking pins by pulling on the locking cable handle or lever. Do not force the locking cable/lever. If the lock pins cannot be disengaged, raise the railgear slightly.

2. Hold the locking cable handle/lever in the disengaged position.

3. Lower the railgear and release the locking cable handle/lever once the railgear has rotated past the road locked position.

4. As the railgear is being deployed, it will start taking some of the vehicle's load. (If this is not the case, **DO NOT use the railgear**. Inspect the railgear for lubrication and damage.)

5. Continue lowering the railgear until the hydraulic cylinders are fully extended. In this position, the railgear should be about 2-3° over center.

Removing the Vehicle from Rail – To Raise the Railgear:

1. Raise the railgear.

2. Continue raising the railgear until the lock pins click into the road locked position. The hydraulic cylinders should be completely retracted.

3. Ensure that the lock pins are engaged.

SERVICE OF ROTATING REAR RAILGEAR

The railgear kit must be serviced regularly to avoid damage to the equipment. Table 3 below provides the Recommended Service Schedule and the detailed service procedures follow.

Figure 3 provides the Non-Standard Fastener Torque Values. Table 4 provides Standard Fastener Torque Values for all other fasteners.

Grease fittings are provided at all railgear lubrication points as shown in Figure 4. The recommended lubricant for all lubrication points on this railgear is **MYSTIK JT-6 LOW TEMP** grease or equivalent. In cold weather areas/seasons, SHELL DARINA XL102 or equivalent may be used.

Table 3: Recommended Service Schedule

	Description	Daily	Weekly	Monthly	3Months	6 Months	12 Months
1	Visually inspect the railgear prior to use for damaged or worn parts	✓					
2	Check for loose wheels and fasteners	✓					
3	Ensure the rail gear lock-up system is functioning properly in both the road and rail positions.	✓					
4	Check and adjust truck tire pressure as per requirements	✓					
5	Ensure the vehicle is in good operating condition based on the vehicle operating and maintenance instructions	✓					
6	Check and adjust rail wheel end play (0.005” max.)						✓
7	Inspect railgear wheel flanges for wear. Use the “RAFNA Wheel Flange Indicator” for measurement		✓				
8	Inspect all hydraulic fittings and hoses for leaks or wear	✓					
9	Inspect rail sweeps for proximity to rail head	✓					
10	Grease hydraulic cylinder pivot points			✓			
11	Grease inner tube lower pivot points			✓			
12	Grease inner tubes			✓			
13	Lubricate locking mechanism			✓	✓	✓	
14	Check level on hydraulic reservoir. Top off with appropriate filtered fluid	✓					
15	Inspect and grease railgear wheel bearings						✓
16	Check and correct rail wheel alignment, if gear is removed or damaged, or every 12 months						✓

Note:

For continuous service at ambient temperatures above 40°C (105°F), more frequent lubrication is required.

Table 4: Standard Fastener Torque Values

Fastener Size	Fastener Torque Value (ft-lbs) Dry
1” UNC Gr. 8 Fasteners	250
¾” UNC Gr. 8 Fasteners	175
$^{5}/_{8}$” UNC Gr. 8 Fasteners	150
½” UNC Gr. 8 Fasteners	100
$^{3}/_{8}$” UNC Gr. 8 Fasteners	40
¼” UNC Gr. 8 Fasteners	12

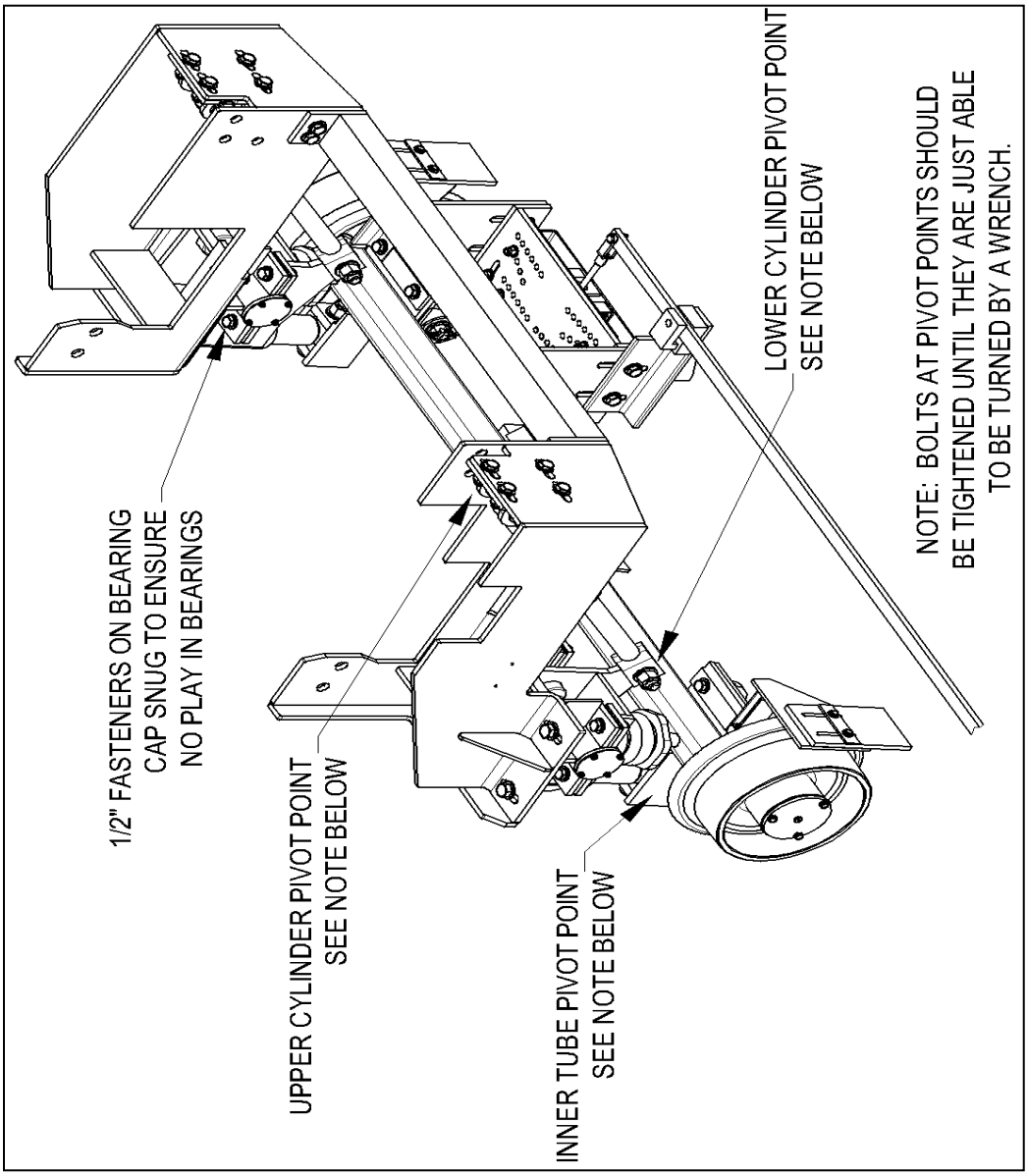

Figure 3: Non-Standard Fastener Torque Values

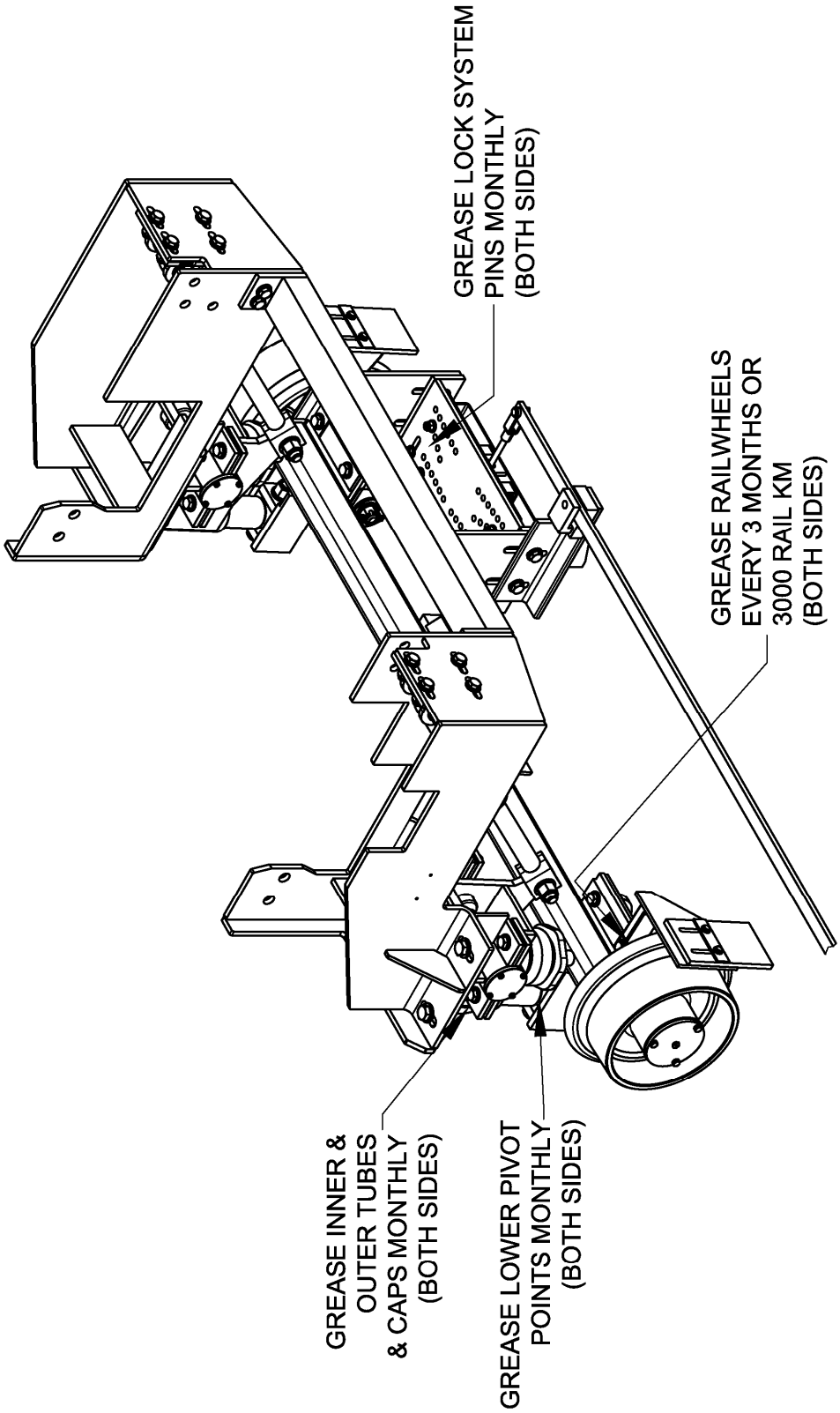

Figure 4: Railgear Lubrication Points

RAILGEAR OVER-CENTER ADJUSTMENT

The railgear is designed to rotate slightly past vertical into the rail position in order to provide a secondary safety feature in the event of a hydraulic and / or lock pin failure. This additional rotation past vertical is called the over-center angle and is set via the stroke of the hydraulic cylinder. The location of the railgear in the road position is also a function of the over-center adjustment, however, DO NOT use the over-center adjustment to adjust the road position of the railgear. This will have adverse effects on the over-center safety feature.

The over-center angle is defined as the angle between the vertical edge of the outer guide tubes and the vertical. It can be measured with the vehicle on a level section of rail with the railgear in the rail position using an angle meter. The over-center angle must be between 2°-3° past vertical. If this is not the case, adjust as follows:

1. Locate K-R4628SHIM Kit provided with Railgear unit.

2. Unload the railgear hydraulic cylinder by raising the railgear out of the rail position.

3. Support the railgear axle and remove the bolts for the hydraulic cylinder support. (Item 3)

4. Determine what shim/shims would be needed to achieve the proper 2°-3° over center and install between the cylinder support and mounting bracket using newly supplied hardware in kit. (Items 2 & 3) (Refer to K-R4628SHIM drawing for shim to degree equivalent) (Discard old hardware, it will not be re-used)

5. Repeat process for remaining cylinder.

6. Both cylinders should have the same amount of shim to stoke evenly over center. This will help to eliminate any binding or twisting of the railgear when deployed to the rail position.

7. Test the railgear though its full range of motion for binding.

8. Re-measure the over-center angle. Repeat process if the angle is still not correct.

9. Following the over-center angle adjustment, the railgear may contact the vehicle if not enough clearance was left during installation. Check the railgear clearance to all vehicle components throughout the full range of railgear and railgear suspension movement. If there is interference with the vehicle bumper, it can be trimmed and reinforced as required.

10. With the railgear fully raised to the road position, ensure that the railgear lock has properly engaged.

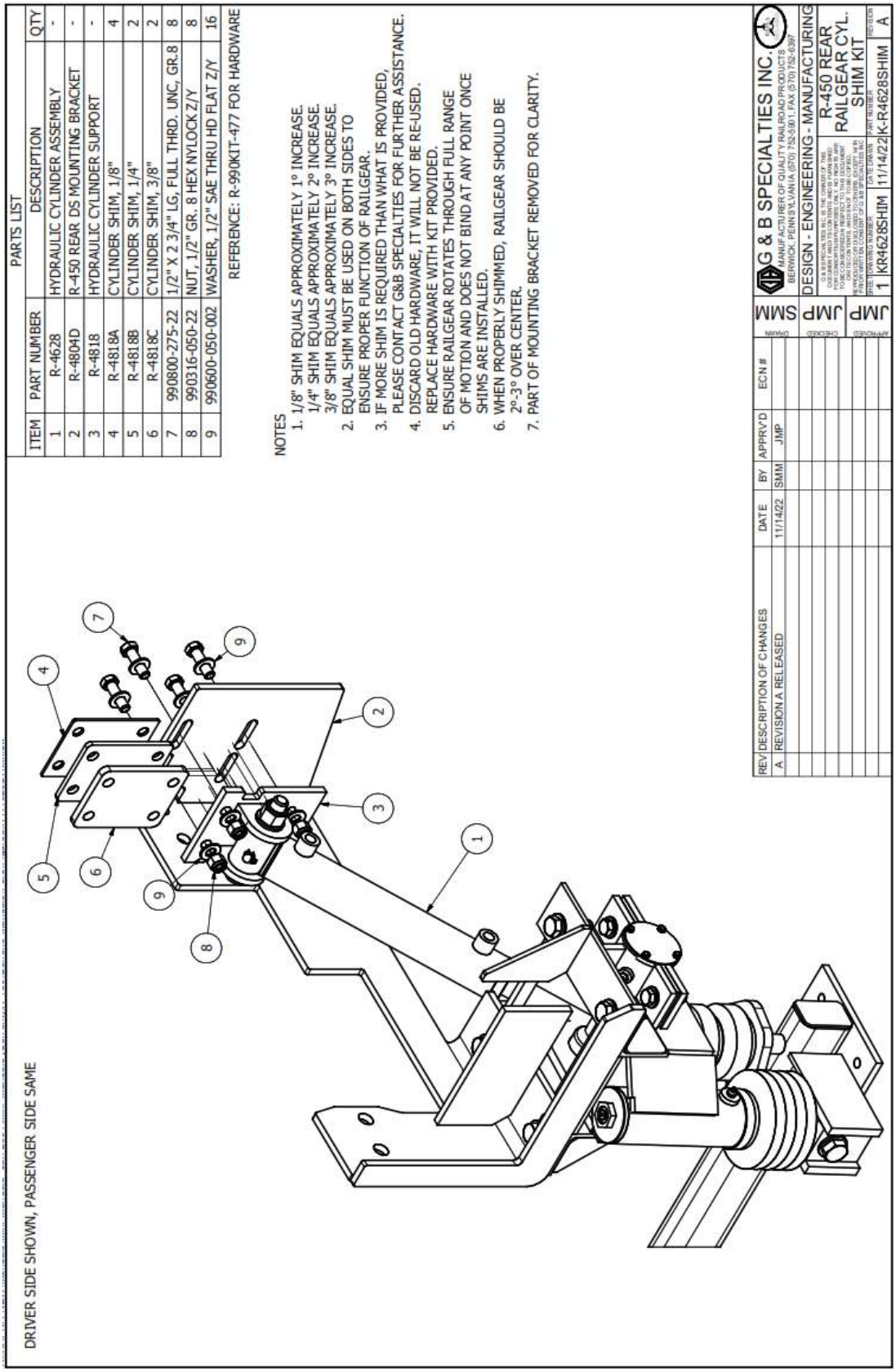

Cylinder Shim

RAIL WHEEL BEARING ADJUSTMENT

The rail wheel bearings require periodic adjustment in order to keep the end-play within specification. If the rail wheel bearings are not correctly adjusted, failure may occur that will not be covered under the railgear warranty. Check and adjust the bearing end-play with the railgear in the road position and with the rail wheels free to turn.

Use a magnetic base dial gauge to measure the end-play of each rail wheel bearing. The bearing end-play must be between 0.001” and 0.005”. If this is not the case, adjust as follows:

1. Remove the rail wheel hubcap and gasket by removing the three 1/4” bolts and 1/4” lock washers.

2. Remove the spindle nut cotter pin.

3. Ensure that the wheel bearing cavity is full of grease.

4. While rotating the rail wheel forward, torque the spindle nut to 20 ft-lbs. Then loosen the spindle nut and re-torque it to 6 ft-lbs. Re-check and re-adjust the bearing end-play if required. If no torque wrench is available, tighten the spindle nut until the rail wheel is difficult to turn by hand. Then loosen the spindle nut and retighten it just until no looseness can be felt in the bearings. Re-adjust the bearing end-play with a torque wrench as soon as possible.

5. Install a new 3/16” x 2” long cotter pin through the spindle nut. Tighten the spindle nut slightly if needed to insert the cotter pin.

6. Re-install the hubcap and gasket using the 1/4” bolts and new 1/4” lock washers. Blue Loctite can be used on the bolts as an added safety measure. Tighten and torque the 1/4” fasteners to 12 ft-lbs dry. Do not over torque.

RAIL SWEEP ADJUSTMENT

The distance between the rail sweep rubber and the rail is adjustable and should be maintained at approximately 1/8”. To adjust the rail sweep rubber, with the railgear in the rail position, loosen the two 1/4” fasteners which secure the rail sweep rubber to the rail sweep bracket. Slide the rail sweep rubber up or down for the correct clearance. Tighten and torque the ¼” fasteners to 12 ft-lbs dry. Do not over torque.

RAIL WHEEL LOAD ADJUSTMENT

During rail travel, the railgear removes a predetermined portion of the vehicle's load from the vehicle's wheels and carries it on the rail wheels. A minimum amount of load must be maintained on the rail wheels in order to avoid derailment. Likewise, a minimum amount of load must be maintained on the vehicle wheels in order to provide traction for acceleration and braking.

The rail wheel load should be adjusted following the installation of the railgear once the vehicle has had all of its permanent load (service body, crane, welders, etc.) installed. The rail wheel load requires periodic checks; however it should only require re-adjustment if the railgear is moved, the vehicle equipment is changed, or the vehicle suspension settles or is changed. As non-permanent load is added to and/or removed from the vehicle, the rail wheel load will change also. This is acceptable as long as the weight ratings of the vehicle, axles, wheels, tires and railgear are not exceeded and as long as the minimum rail wheel load is maintained.

The rail wheel load must be a minimum of 800 lbs and is checked as described below using a hydraulic bottle jack equipped with a gauge. If the gauge on the hydraulic bottle jack reads in pounds per square inch (psi), use Table 5 along with the jack bore diameter to convert this reading to pounds (lbs). If the gauge reads in pounds, then no conversion is required.

Check each rail wheel load as follows:

1. Place the vehicle on a straight and level section of rail with the railgear lowered to the rail position. Ensure the railgear is taking load through the tread of the rail wheel and not on the flange of the rail wheel. The vehicle should only be carrying the permanently attached load (service body, crane, etc.) and any always carried non-attached load (welders, etc.) during this procedure. Do not include the operator or passengers. Ensure the vehicle tires have been inflated to the manufacturer's recommended air pressure and that they are not in contact with any obstructions except the rails.

2. Place the hydraulic bottle jack on a solid surface beneath the rail wheel spindle housing and jack the rail wheel off the rail.

3. Insert a piece of paper between the rail and the rail wheel. Lower the jack until the rail wheel squeezes the paper so that it cannot be pulled out.

4. Slowly jack up the rail wheel while pulling on the paper and observe the jack gauge. When the paper can be pulled out, stop jacking.

5. Record the load or pressure reading on the jack gauge.

6. If necessary, convert the pressure reading to a load reading using the supplied table.

Table 5: Rail Wheel Load vs Jack Pressure and Bore

Jack Pressure (PSI)	Jack Cylinder Bore Diameter (inches)								
	7/8	15/16	1	1 1/16	1 1/8	1 3/16	1 1/4	1 5/16	1 3/8
540	320	370	420	480	540	600	660	730	800
560	340	390	440	500	560	620	690	760	830
580	350	400	460	510	580	640	710	780	860
600	360	410	470	530	600	660	740	810	890
620	370	430	490	550	620	690	760	840	920
640	380	440	500	570	640	710	790	870	950
660	400	460	520	590	660	730	810	890	980
680	410	470	530	600	680	750	830	920	1010
700	420	480	550	620	700	780	860	950	1040
720	430	500	570	640	720	800	880	970	1070
740	440	510	580	660	740	820	910	1000	1100
760	460	520	600	670	760	840	930	1030	1130
780	470	540	610	690	780	860	960	1060	1160
800	480	550	630	710	800	890	980	1080	1190
820	490	570	640	730	820	910	1010	1110	1220
840	510	580	660	740	830	930	1030	1140	1250
860	520	590	680	760	850	950	1060	1160	1280
880	530	610	690	780	870	970	1080	1190	1310
900	540	620	710	800	890	1000	1100	1220	1340
920	550	640	720	820	910	1020	1130	1240	1370
940	570	650	740	830	930	1040	1150	1270	1400
960	580	660	750	850	950	1060	1180	1300	1430
980	590	680	770	870	970	1090	1200	1330	1460
1000	600	690	790	890	990	1110	1230	1350	1480
1020	610	700	800	900	1010	1130	1250	1380	1510
1040	630	720	820	920	1030	1150	1280	1410	1540
1060	640	730	830	940	1050	1170	1300	1430	1570
1080	650	750	850	960	1070	1200	1330	1460	1600
1100	660	760	860	980	1090	1220	1350	1490	1630
1120	670	770	880	990	1110	1240	1370	1520	1660
1140	690	790	900	1010	1130	1260	1400	1540	1690
1160	700	800	910	1030	1150	1280	1420	1570	1720
1180	710	810	930	1050	1170	1310	1450	1600	1750
1200	720	830	940	1060	1190	1330	1470	1620	1780
1220	730	840	960	1080	1210	1350	1500	1650	1810
1240	750	860	970	1100	1230	1370	1520	1680	1840
1260	760	870	990	1120	1250	1400	1550	1700	1870
1280	770	880	1010	1130	1270	1420	1570	1730	1900
1300	780	900	1020	1150	1290	1440	1600	1760	1930
1320	790	910	1040	1170	1310	1460	1620	1790	1960
1340	810	920	1050	1190	1330	1480	1640	1810	1990
1360	820	940	1070	1210	1350	1510	1670	1840	2020
1380	830	950	1080	1220	1370	1530	1690	1870	2050
1400	840	970	1100	1240	1390	1550	1720	1890	2080
1420	850	980	1120	1260	1410	1570	1740	1920	2110
1440	870	990	1130	1280	1430	1590	1770	1950	2140
1460	880	1010	1150	1290	1450	1620	1790	1980	2170
1480	890	1020	1160	1310	1470	1640	1820	2000	2200
1500	900	1040	1180	1330	1490	1660	1840	2030	2230
1520	910	1050	1190	1350	1510	1680	1870	2060	2260
1540	930	1060	1210	1370	1530	1710	1890	2080	2290
1560	940	1080	1230	1380	1550	1730	1910	2110	2320
1580	950	1090	1240	1400	1570	1750	1940	2140	2350
1600	960	1100	1260	1420	1590	1770	1960	2160	2380
1620	970	1120	1270	1440	1610	1790	1990	2190	2410
1640	990	1130	1290	1450	1630	1820	2010	2220	2440
1660	1000	1150	1300	1470	1650	1840	2040	2250	2460
1680	1010	1160	1320	1490	1670	1860	2060	2270	2490
1700	1020	1170	1340	1510	1690	1880	2090	2300	2520
1720	1030	1190	1350	1530	1710	1900	2110	2330	2550
1740	1050	1200	1370	1540	1730	1930	2140	2350	2580

Rail Wheel Load (lbs)

Adjust each rail wheel load as follows:

There are two rubber springs on the railgear located between each railgear outer tube assembly and spring plate. Each spring is held in place by a nylock nut above it and a spring plate with a jam nut below it. The spring plate can be lowered and raised on the threaded rod to correspondingly decrease and increase the rail wheel load.

1. Raise the railgear until the rail wheels are off the rails.

2. Loosen the 1” nylock nut above each spring and the 1” jam nut under each spring plate.

3. To decrease the load on the rail wheels, lower the spring plates on the threaded rods. To increase the load on the rail wheels, raise the spring plates on the threaded rods. Each side should be adjusted the same amount.

4. Lower the railgear to the rail position and re-check the rail wheel loads. Re-adjust the rail wheel loads if necessary.

5. Raise the railgear until the rail wheels are off the rails. Tighten the 1” jam nut on the threaded rod so that they are tight against the spring plate.

6. Tighten the 1” nylock nuts above the springs so that the rubber springs are compressed to 3.75”.

7. Following the rail wheel load adjustment, the railgear may contact the vehicle if not enough clearance was left during installation. Check the railgear clearance to all vehicle components throughout the full range of railgear and railgear suspension movement. If there is interference with the vehicle exhaust system, it can be bent to fit, ensuring any exhaust system modifications conform to applicable laws and regulations. If there is interference with any other vehicle components, please call G&B Specialties, Inc. for technical assistance.

Table 5: Rail Wheel Load vs Jack Pressure and Bore

Jack Pressure (PSI)	Jack Cylinder Bore Diameter (inches)								
	7/8	15/16	1	1 1/16	1 1/8	1 3/16	1 1/4	1 5/16	1 3/8
540	320	370	420	480	540	600	660	730	800
560	340	390	440	500	560	620	690	760	830
580	350	400	460	510	580	640	710	780	860
600	360	410	470	530	600	660	740	810	890
620	370	430	490	550	620	690	760	840	920
640	380	440	500	570	640	710	790	870	950
660	400	460	520	590	660	730	810	890	980
680	410	470	530	600	680	750	830	920	1010
700	420	480	550	620	700	780	860	950	1040
720	430	500	570	640	720	800	880	970	1070
740	440	510	580	660	740	820	910	1000	1100
760	460	520	600	670	760	840	930	1030	1130
780	470	540	610	690	780	860	960	1060	1160
800	480	550	630	710	800	890	980	1080	1190
820	490	570	640	730	820	910	1010	1110	1220
840	510	580	660	740	830	930	1030	1140	1250
860	520	590	680	760	850	950	1060	1160	1280
880	530	610	690	780	870	970	1080	1190	1310
900	540	620	710	800	890	1000	1100	1220	1340
920	550	640	720	820	910	1020	1130	1240	1370
940	570	650	740	830	930	1040	1150	1270	1400
960	580	660	750	850	950	1060	1180	1300	1430
980	590	680	770	870	970	1090	1200	1330	1460
1000	600	690	790	890	990	1110	1230	1350	1480
1020	610	700	800	900	1010	1130	1250	1380	1510
1040	630	720	820	920	1030	1150	1280	1410	1540
1060	640	730	830	940	1050	1170	1300	1430	1570
1080	650	750	850	960	1070	1200	1330	1460	1600
1100	660	760	860	980	1090	1220	1350	1490	1630
1120	670	770	880	990	1110	1240	1370	1520	1660
1140	690	790	900	1010	1130	1260	1400	1540	1690
1160	700	800	910	1030	1150	1280	1420	1570	1720
1180	710	810	930	1050	1170	1310	1450	1600	1750
1200	720	830	940	1060	1190	1330	1470	1620	1780
1220	730	840	960	1080	1210	1350	1500	1650	1810
1240	750	860	970	1100	1230	1370	1520	1680	1840
1260	760	870	990	1120	1250	1400	1550	1700	1870
1280	770	880	1010	1130	1270	1420	1570	1730	1900
1300	780	900	1020	1150	1290	1440	1600	1760	1930
1320	790	910	1040	1170	1310	1460	1620	1790	1960
1340	810	920	1050	1190	1330	1480	1640	1810	1990
1360	820	940	1070	1210	1350	1510	1670	1840	2020
1380	830	950	1080	1220	1370	1530	1690	1870	2050
1400	840	970	1100	1240	1390	1550	1720	1890	2080
1420	850	980	1120	1260	1410	1570	1740	1920	2110
1440	870	990	1130	1280	1430	1590	1770	1950	2140
1460	880	1010	1150	1290	1450	1620	1790	1980	2170
1480	890	1020	1160	1310	1470	1640	1820	2000	2200
1500	900	1040	1180	1330	1490	1660	1840	2030	2230
1520	910	1050	1190	1350	1510	1680	1870	2060	2260
1540	930	1060	1210	1370	1530	1710	1890	2080	2290
1560	940	1080	1230	1380	1550	1730	1910	2110	2320
1580	950	1090	1240	1400	1570	1750	1940	2140	2350
1600	960	1100	1260	1420	1590	1770	1960	2160	2380
1620	970	1120	1270	1440	1610	1790	1990	2190	2410
1640	990	1130	1290	1450	1630	1820	2010	2220	2440
1660	1000	1150	1300	1470	1650	1840	2040	2250	2460
1680	1010	1160	1320	1490	1670	1860	2060	2270	2490
1700	1020	1170	1340	1510	1690	1880	2090	2300	2520
1720	1030	1190	1350	1530	1710	1900	2110	2330	2550
1740	1050	1200	1370	1540	1730	1930	2140	2350	2580

Rail Wheel Load (lbs)

RAILGEAR ALIGNMENT

The railgear must be correctly aligned to perform properly, safely, and avoid excessive wear and derailment. The rail wheels can be independently aligned for toe-in/toe-out and the railgear can be adjusted side to side (laterally) on the vehicle. A parallel line system and the following procedure should be used to perform the railgear alignment.

The rail wheel loads should be checked and adjusted, the vehicle should have had a four-wheel alignment (with the complete railgear package installed on the vehicle and any suspension modifications done) and the tires should be properly inflated prior to performing the railgear alignment.

The railgear alignment is done with the vehicle on a straight and level section of rail with the railgear in the rail position and the vehicle wheels pointing straight ahead. The individual rail wheel alignment should be done first, followed by the lateral alignment of the railgear.

Each rail wheel is aligned by loosening the four 1/2” fasteners that secure it to the railgear axle. The rail wheel is then turned into alignment. The four 1/2” fasteners should then be tightened and torqued to 100 ft-lbs dry. Do not over torque.

The railgear is aligned laterally by loosening the eight 5/8” fasteners that secure it to the railgear mounting boxes. The railgear is then moved sideways into alignment. It may be necessary to raise the railgear off the rails to move the railgear side to side. Do not use any force against the railgear guide tubes as this may damage them and restrict suspension movement. The eight 5/8” fasteners should then be tightened and torqued to 150 ft-lbs dry. Do not over torque.

Refer to Figure 5 for alignment measurement and specifications. Use an 18” magnetic straight edge on the back of each rail wheel to measure from.

Following the railgear alignment, the railgear may contact the vehicle if not enough clearance was left during installation. Check the railgear clearance to all vehicle components throughout the full range of railgear and railgear suspension movement. If there is interference with the vehicle bumper, it can be trimmed and reinforced as required. If there is interference with the vehicle exhaust system, it can be bent to fit, ensuring any exhaust system modifications conform to applicable laws and regulations. If there is interference with any other vehicle components, please call G&B Specialties, Inc. for technical assistance.

RAFNA RAILGEAR ALIGNMENT RACK DATA

GAS OR DIESEL VIN#_____

VEHICLE MAKE:_____ VEHICLE MODEL:_____ VEHICLE YEAR:_____
DOOR STICKER GVWR:_____ DOOR STICKER GAWR FRT:_____ DOOR STICKER GAWR RR_____
RAILGEAR S/N: FRT_____ RR_____ VEHICLE UNIT #,S/N:_____
RAILGEAR TYPE:_____ INSTALLER: _____ DATE: _____

SET UP PARALLEL STRING LINES
A & B MUST BE EQUAL WITHIN 1/32"
C & D MUST BE EQUAL WITHIN 1/32"

ADJUST STRING LINES AROUND VEHICLE
E, F, G, & H MUST BE EQUAL WITHIN 1/16"
I, J, K, & L MUST BE EQUAL WITHIN 1/16"
(E, F, G, & H MAY NOT EQUAL I, J, K, & L)

ADJUST RAIL WHEEL ALIGNMENT
M & O MUST BE EQUAL WITHIN 1/16"
N & P MUST BE EQUAL WITHIN 1/16"
Q & S MUST BE EQUAL WITHIN 1/16"
R & T MUST BE EQUAL WITHIN 1/16"

ADJUST RAILGEAR LATERAL ALIGNMENT
M & O MUST EQUAL N & P WITHIN 1/8"
Q & S MUST EQUAL R & T WITHIN 1/8"

ENSURE THAT U & V ARE BETWEEN
53– 7/16" AND 53—9/16"

OVER-CENTER ANGLE (DEGREE)
FRONT_____
REAR _____

RAIL WHEEL LOADS (LBS)
LEFT FRONT _____RIGHT FRONT_____
LEFT REAR _____ RIGHT REAR _____

RAIL WHEEL FLANGE TO GROUND CLEARANCE
LEFT FRONT _____RIGHT FRONT_____
LEFT REAR _____ RIGHT REAR _____

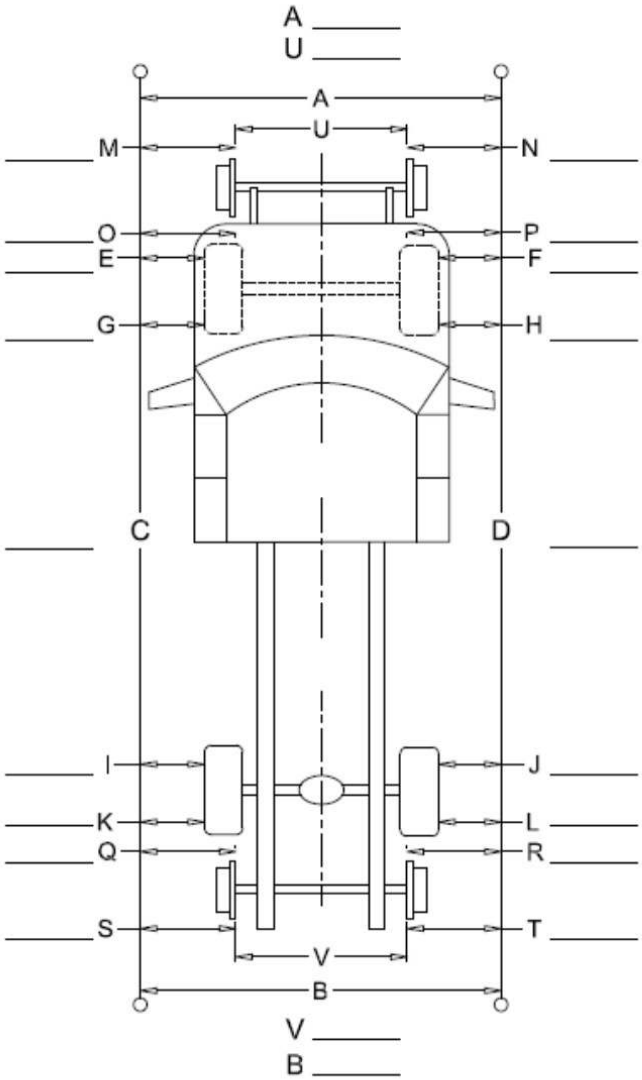

MOUNTING HEIGHT FRONT: _____ MOUNTING HEIGHT REAR: _____

STOCK TURNING DIAMETER: _____ **MODIFIED** TURNING DIAMETER: _____

OEM: VEHICLE WEIGHT: _____ FRONT GAWR: _____ REAR GAWR: _____

MODIFIED: VEHICLE WEIGHT: _____FRONT GAWR: _____REAR GAWR:_____

FAX COMPLETED FORM TO JAKE SANUTE AT FAX # 570-802-0491

MAY 31, 2018 REV "D"

Figure 5: Railgear Alignment Rack

RAFNA RAILGEAR PORTABLE ALIGNMENT DATA

GAS OR DIESEL VIN#_____

VEHICLE MAKE:_____ VEHICLE MODEL:_____ VEHICLE YEAR:_____
DOOR STICKER GVWR:_____ DOOR STICKER GAWR FRT:_____ DOOR STICKER GAWR RR_____
RAILGEAR S/N: FRT_____ RR_____ VEHICLE UNIT #,S/N:_____
RAILGEAR TYPE:_____ INSTALLER: _____ DATE: _____

ADJUST RAILGEAR LATERAL ALIGNMENT
A MUST EQUAL B WITHIN 1/8"
C MUST EQUAL D WITHIN 1/8"

ENSURE THAT U & V ARE BETWEEN
53– 7/16" AND 53—9/16"

OVER-CENTER ANGLE (DEGREE)
FRONT_____
REAR _____

RAIL WHEEL LOADS (LBS)
LEFT FRONT _____RIGHT FRONT_____
LEFT REAR _____ RIGHT REAR _____

RAIL WHEEL FLANGE TO GROUND CLEAR-ANCE
LEFT FRONT _____RIGHT FRONT_____
LEFT REAR _____ RIGHT REAR _____

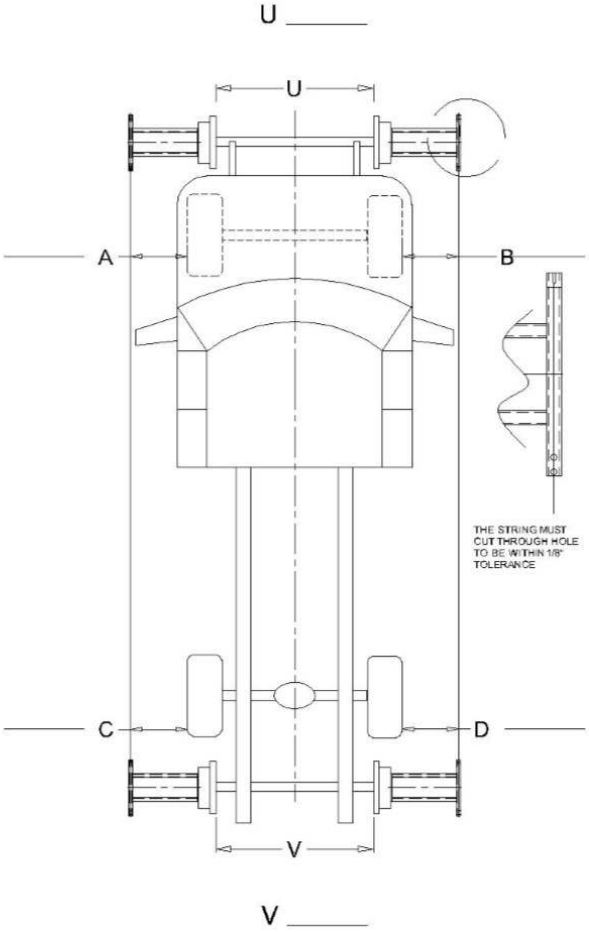

MOUNTING HEIGHT FRONT: _____ MOUNTING HEIGHT REAR: _____

STOCK TURNING DIAMETER: _____ **MODIFIED** TURNING DIAMETER: _____

OEM: VEHICLE WEIGHT: _____ FRONT GAWR: _____ REAR GAWR: _____

MODIFIED: VEHICLE WEIGHT: _____FRONT GAWR: _____REAR GAWR:_____

FAX COMPLETED FORM TO JAKE SANUTE AT FAX # 570-802-0491

MAY 31, 2018 REV B

Figure 6: Railgear Alignment Portable

RAILGEAR LOCK SYSTEM ADJUSTMENT PROCEDURE

The rear lock-up adjustment procedure is the same for all rear lock-up types.

The rear railgear lock system provides a mechanical locking mechanism to hold the railgear axle in the road position. For the system to function properly, the contact surface of the angle plate on the axle and the top surface of the locking pins must have a contact length of approximately 3/4" to 7/8" as shown by **Figure 7**. If these criteria are not met, the following procedure can be followed:

1. Raise the railgear to the road position. Support the railgear axle and the lock-up system.

2. Remove lock-up cover (if equipped).

3. Loosen the four 1/2" fasteners that secure the lock-up support to the lock-up frame.

4. Ensure the lock-up support is adjusted all the way down to the bottom of the adjustment slots. **Torque the four 1/2" fasteners to 100 ft-lbs dry. Do not over torque.**

5. Remove the four inside 3/8" fasteners that secure the lock-up plate to the lock-up support.

6. Lower the rear railgear until the bottom surface angle plate and the top surface of the lock pins are in contact with each other. **The angle plate and lock pins should be parallel to each other upon contact**.

7. If the angle plate and lock pins are not parallel to each other, the lock up support can be rotated and/or raised/lowered in its mounting slots to adjust the contact angle.

8. Loosen the two outside 3/8" fasteners that secure the lock-up plate to the lock-up support.

9. Adjust the lock-up plate in or out accordingly so that the contact surface of the angle plate and the top surface of the lock pins have a contact length of approximately 3/4" to 7/8".

10. The holes in the lock-up plate and the lock-up support allow for horizontal adjustment in 1/8" increments. Align the closest set of holes that will allow a contact length of approximately 3/4" to 7/8".

11. Re-install the four inside 3/8" fasteners that secure the lock-up plate to the lock-up support, that were removed in step #5 above. **Tighten but do not torque at this time.**

12. Retract the lock pins and lower the railgear. Raise the railgear and ensure that the lock system has been properly adjusted and functioning properly and that there are no interferences between lock-up and railgear axle.

13. With the railgear fully retracted to the road position and the lock-up adjusted as outlined in the previous steps, there should be approximately 3/4" clearance between the angle plate and lock pins as shown in **Figure 9.**

14. Repeat the above steps as necessary.

15. Tighten two outside 3/8” fasteners that secure the lock-up plate to the lock-up support.

16. Torque the 3/8” fasteners to 40 ft-lbs dry. Do not over torque.

Note

The rear railgear unit should be shipped with the lock-up assembly installed upside down (cover towards the ground). The rear lock-up can be removed and re-installed right side up (cover towards the truck). This is to accommodate and possible clearance, installation or adjustment issues that may come up. The installation/adjustment procedure is the same for either orientation.

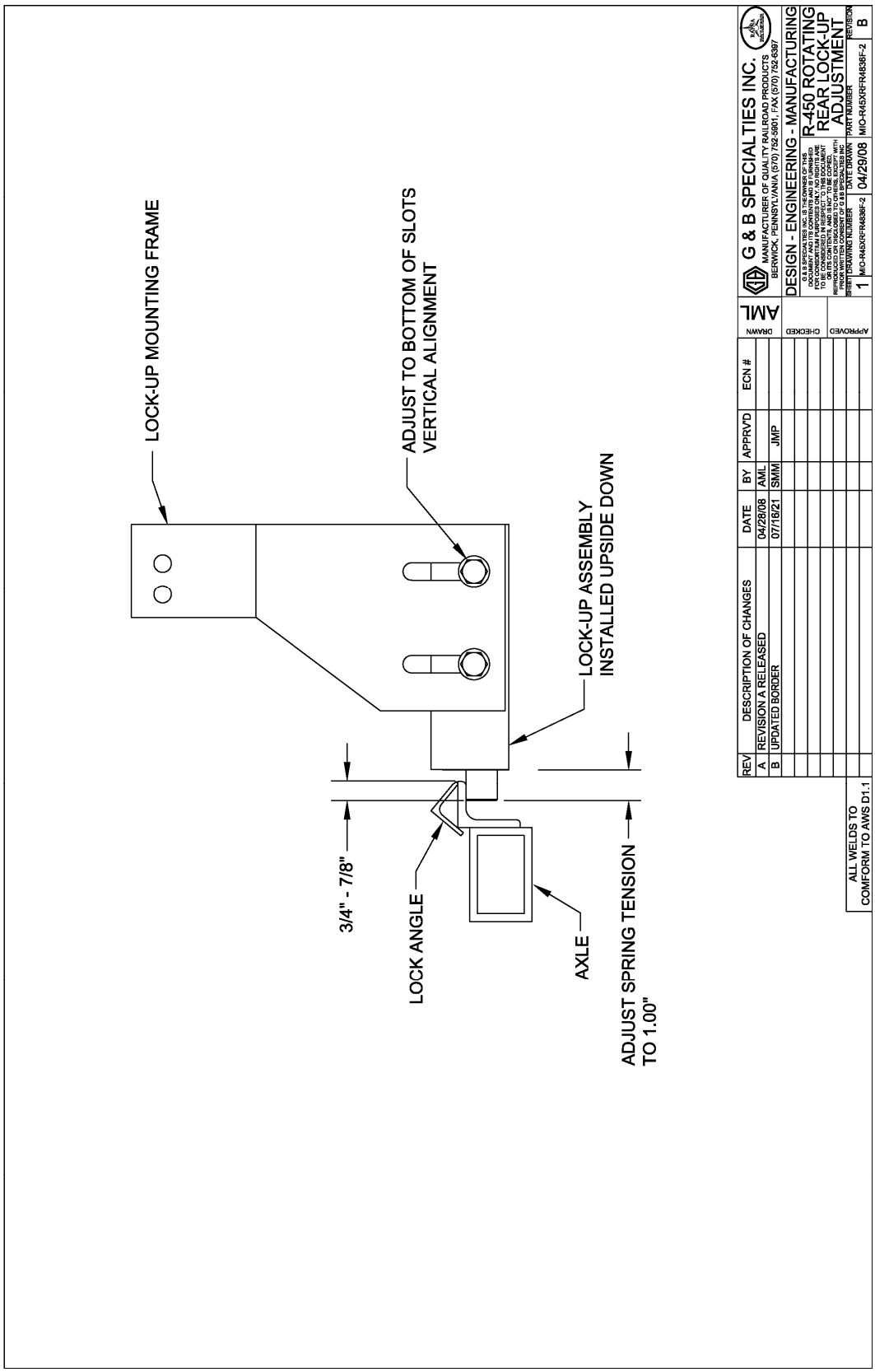
LOCK-UP MOUNTING FRAME
ADJUST TO BOTTOM OF SLOTS
VERTICAL ALIGNMENT
LOCK-UP ASSEMBLY
INSTALLED UPSIDE DOWN
3/4" - 7/8"
LOCK ANGLE
AXLE
ADJUST SPRING TENSION
TO 1.00"
REV
DESCRIPTION OF CHANGES
DATE
BY
APPRVD
ECN #
A
REVISION A RELEASED
04/28/08
AML
B
UPDATED BORDER
07/16/21
SMM
JMP
DRAWN
AML
CHECKED
APPROVED
ALL WELDS TO
COMFORM TO AWS D1.1
G & B SPECIALTIES INC.
MANUFACTURER OF QUALITY RAILROAD PRODUCTS
BERWICK, PENNSYLVANIA (570) 752-5901, FAX (570) 752-6397
DESIGN - ENGINEERING - MANUFACTURING
R-450 ROTATING
REAR LOCK-UP
ADJUSTMENT
1
MIO-R45XRFR4836F-2
04/29/08
MIO-R45XRFR4836F-2
B

Figure 7

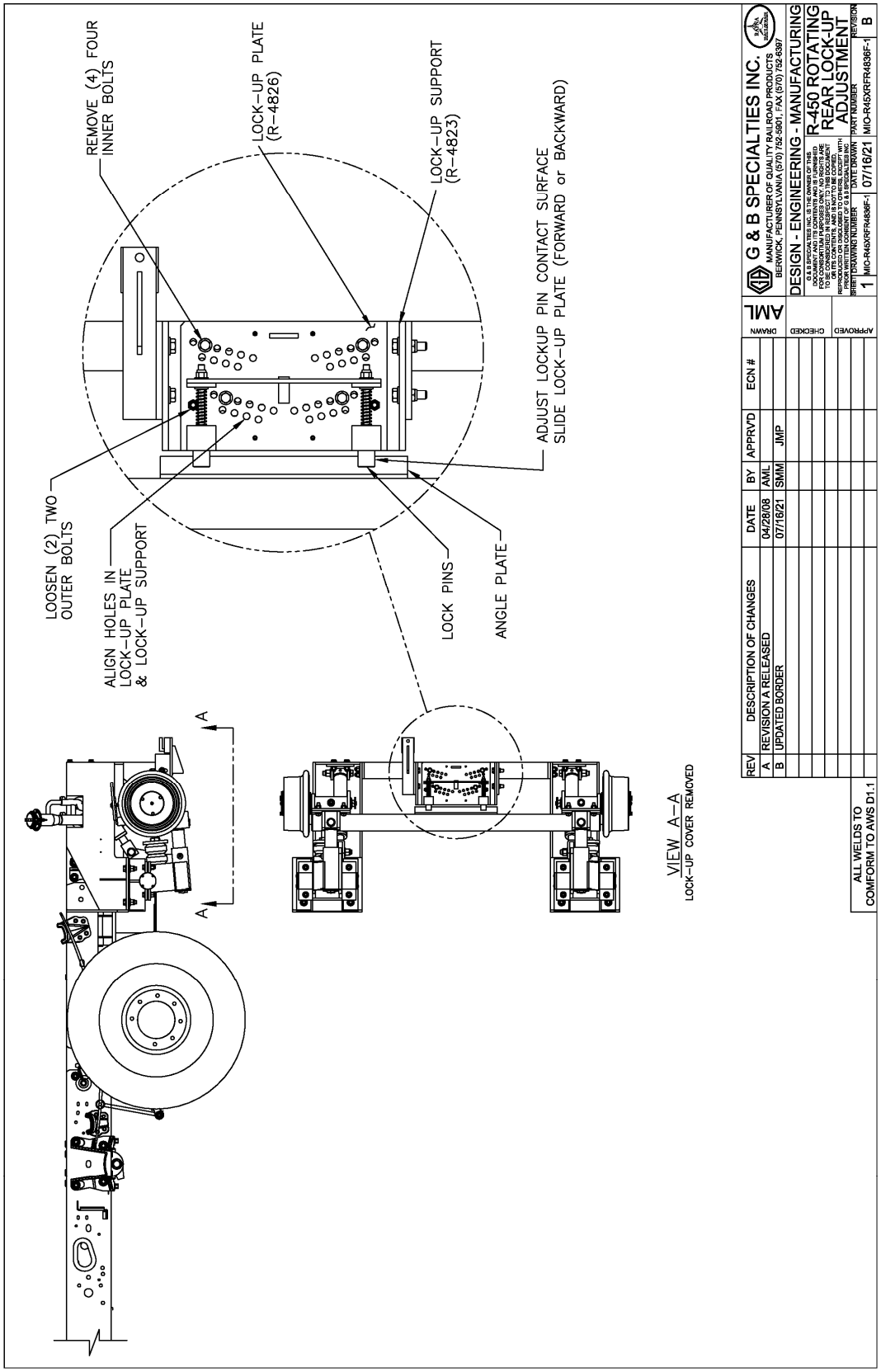
REMOVE (4) FOUR INNER BOLTS
LOCK-UP PLATE (R-4826)
LOCK-UP SUPPORT (R-4823)
ADJUST LOCKUP PIN CONTACT SURFACE SLIDE LOCK-UP PLATE (FORWARD or BACKWARD)
LOOSEN (2) TWO OUTER BOLTS
ALIGN HOLES IN LOCK-UP PLATE & LOCK-UP SUPPORT
LOCK PINS
ANGLE PLATE
A
A
VIEW A-A
LOCK-UP COVER REMOVED
REV
DESCRIPTION OF CHANGES
DATE
BY
APPRV'D
ECN #
A REVISION A RELEASED 04/28/08 AML
B UPDATED BORDER 07/16/21 SMM JMP
DRAWN AML
CHECKED
APPROVED
G & B SPECIALTIES INC.
MANUFACTURER OF QUALITY RAILROAD PRODUCTS
BERWICK, PENNSYLVANIA (570) 752-5901, FAX (570) 752-6397
DESIGN - ENGINEERING - MANUFACTURING
R-450 ROTATING REAR LOCK-UP ADJUSTMENT
SHEET 1
DRAWING NUMBER MIO-R45XRFR4836F-1
DATE DRAWN 07/16/21
PART NUMBER MIO-R45XRFR4836F-1
REVISION B
ALL WELDS TO COMFORM TO AWS D1.1

Figure 8

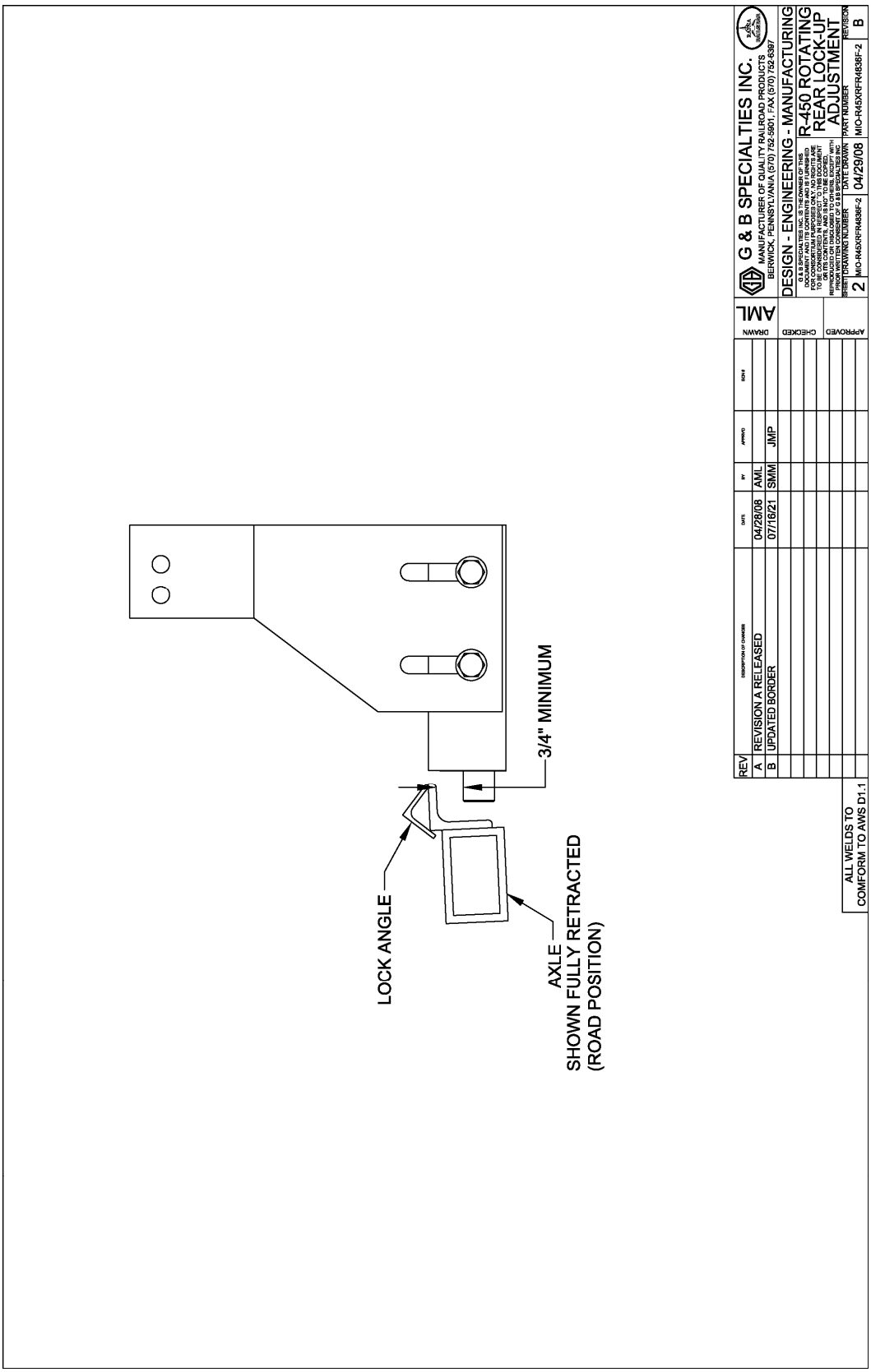
3/4" MINIMUM
LOCK ANGLE
AXLE
SHOWN FULLY RETRACTED
(ROAD POSITION)
REV
DESCRIPTION OF CHANGES
DATE
BY
APPROVED
A REVISION A RELEASED 04/28/08 AML
B UPDATED BORDER 07/16/21 SMM JMP
ALL WELDS TO
COMFORM TO AWS D1.1
DRAWN
AML
CHECKED
APPROVED
G & B SPECIALTIES INC.
MANUFACTURER OF QUALITY RAILROAD PRODUCTS
BERWICK, PENNSYLVANIA (570) 752-5901, FAX (570) 752-6397
DESIGN - ENGINEERING - MANUFACTURING
R-450 ROTATING
REAR LOCK-UP
ADJUSTMENT
2
MIO-R45XRFR4836F-2
04/29/08
MIO-R45XRFR4836F-2
B

Figure 9

RAILGEAR LOCK SYSTEM SERVICE

The rear lock-up system needs to be routinely serviced and inspected to function properly.

Below is recommended service schedule that should be followed to help ensure the proper operation of the rear lock-up system.

Recommended Service Schedule – R-450 Rotating Rear Railgear

	DESCRIPTION	DAILY	WEEKLY	MONTHLY	3 MONTHS
1.	Visually inspect the rear lock-up system, prior to use, for damaged or worn parts.	✓			
2.	Visually inspect the lock-up system for excessive accumulation of dirt, debris and any foreign matter; clean if necessary.		✓		
3.	Check for loose or damaged fasteners.			✓	
4.	Ensure the rail gear lock-up system is functioning properly in both the road and rail positions.	✓			
5.	Pressure wash rear lock-up/railgear to remove any accumulated dirt.			✓*	✓
6.	Lubricate rear lock-up.			✓*	✓

*** PERFORM MONTHLY IF OPERATING IN EXCESSIVELY HAZARDOUS/DIRTY ENVIORNMENT***

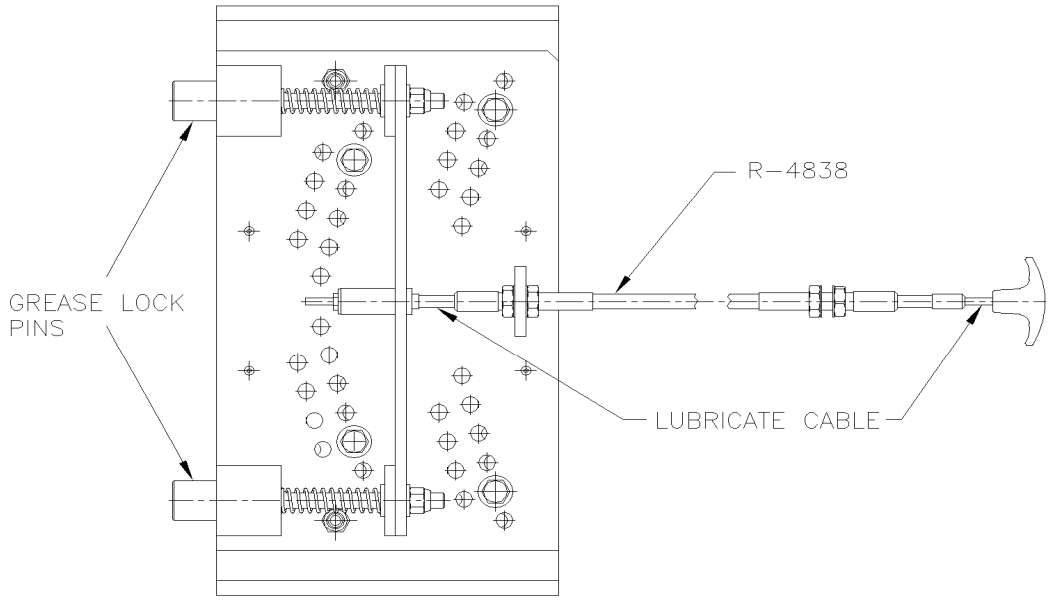

REAR LOCK-UP ASSEMBLY
CABLE ACTUATED

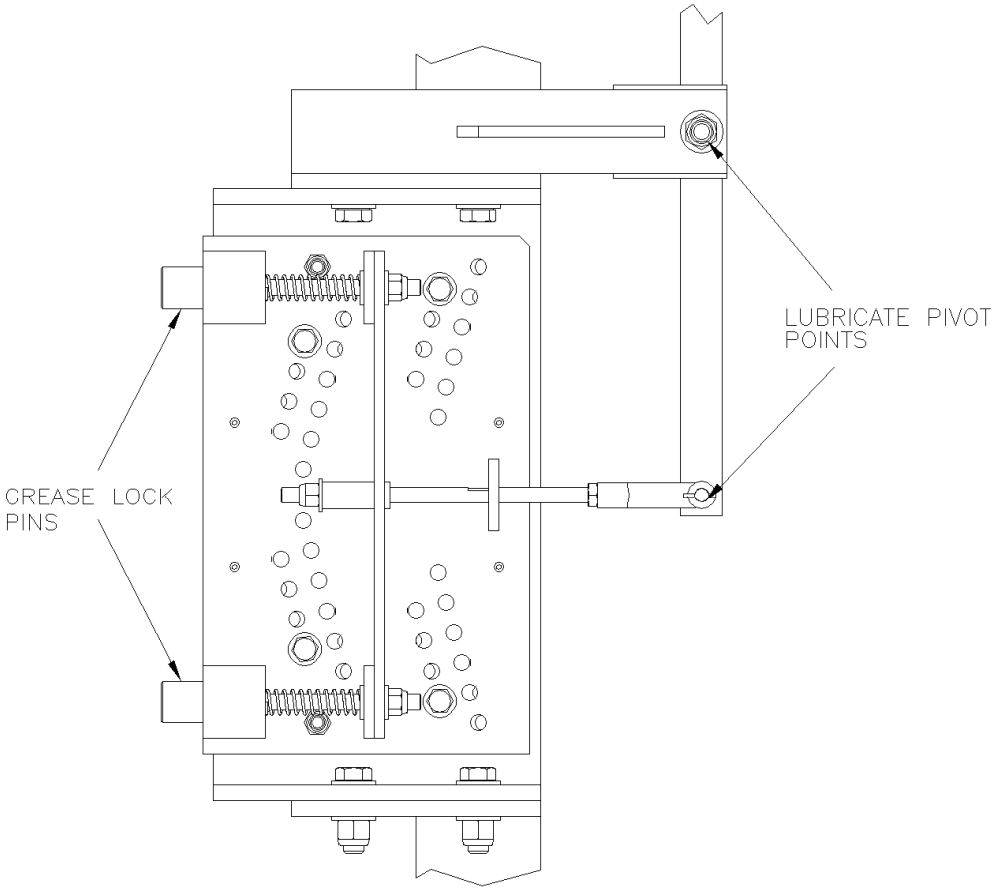

REAR LOCK-UP ASSEMBLY
LEVER ACTUATED

WHEEL WEAR STANDARDS AND RECOMMENDATIONS

At the present time, G&B produces 8”, 10”, 12”, 14”, and 16” steel wheels. Each size has a different flange and tread thickness, which dictates the allowable wear. Although the following numbers are recommended limits, risk of failure is increased when not followed. Rail gauge can be supplied by G&B Specialties for 8”, 10”, 12”, 14”, and 16” rail wheels. They are used as go/no go gauges. When placed on rail wheels they will indicate how much wear is still permissible or if the rail wheels need to be replaced.

The gauge for the R-450 model railgear can be ordered using the following part number; S-001200

- **Rail wheel failure can result in equipment damage or failure, personal injury, or death.**

Flange Wear Limits:
The maximum flange wear is indicated on the rail wheel gauge. When the gauge is placed on the rail wheel, if a gap is seen between the gauge and the maximum flange wear line, the rail wheel needs to be replaced.

Tread Wear Limits:
For tread wear, use the following chart in conjunction with the appropriate rail wheel gauge.

NOMINAL RAIL WHEEL DIAMETER (INCHES)	MIN. ALLOWABLE WHEEL DIAMETER (INCHES)
10	9 3/4

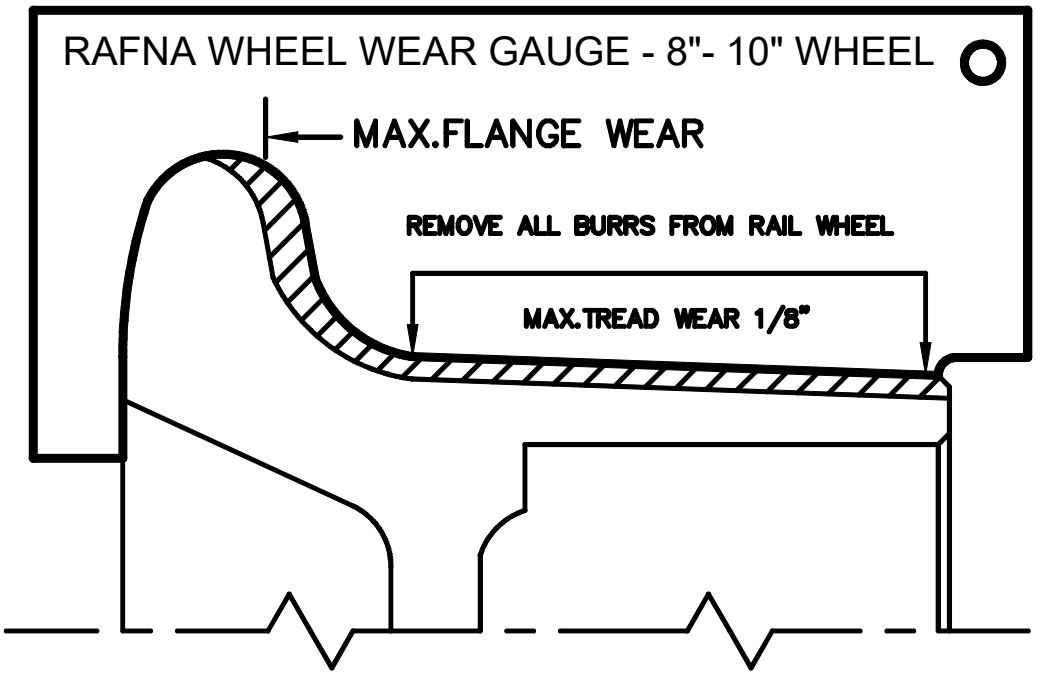

PARTS OF R-450 ROTATING REAR RAILGEAR KIT

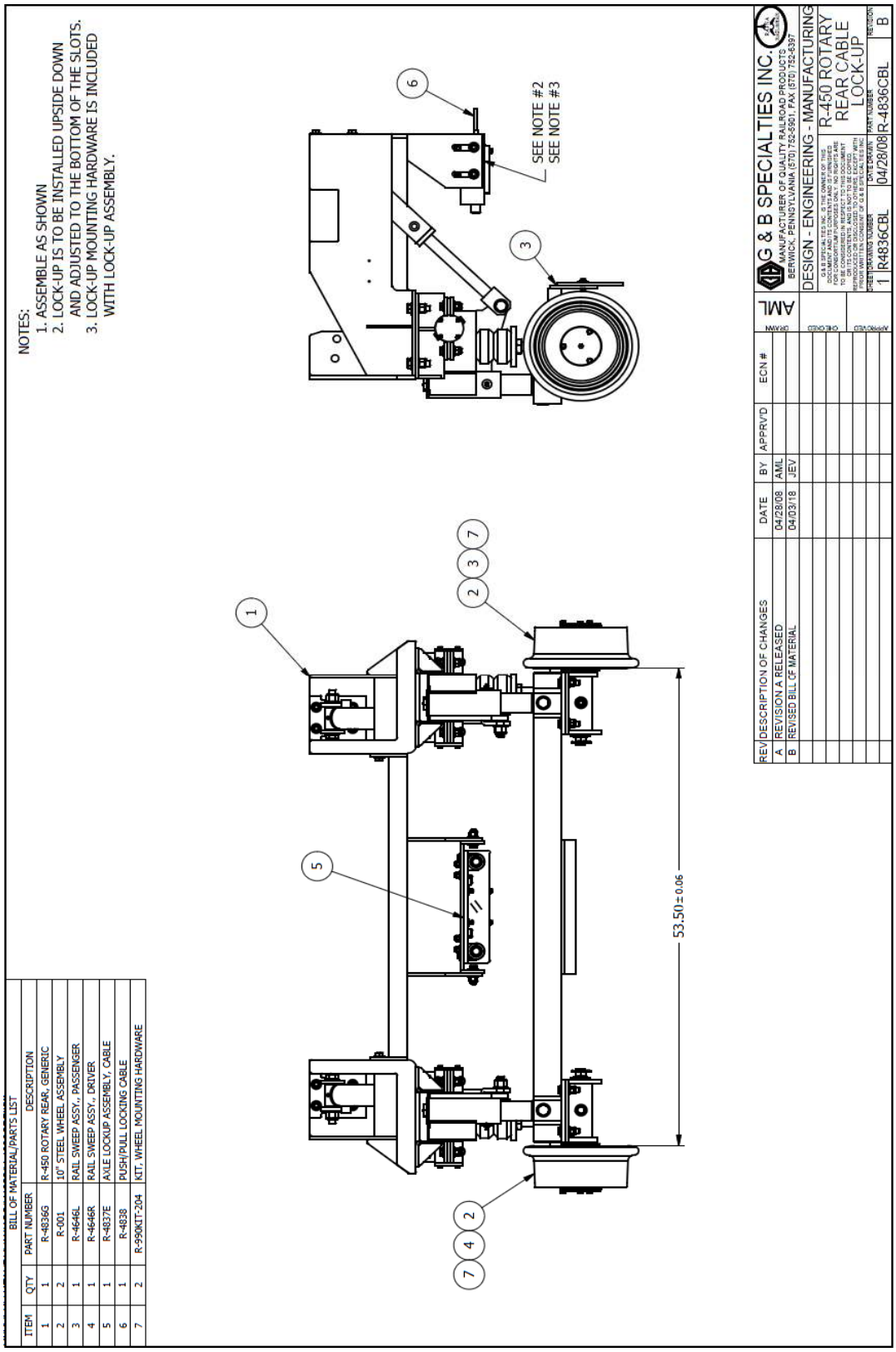

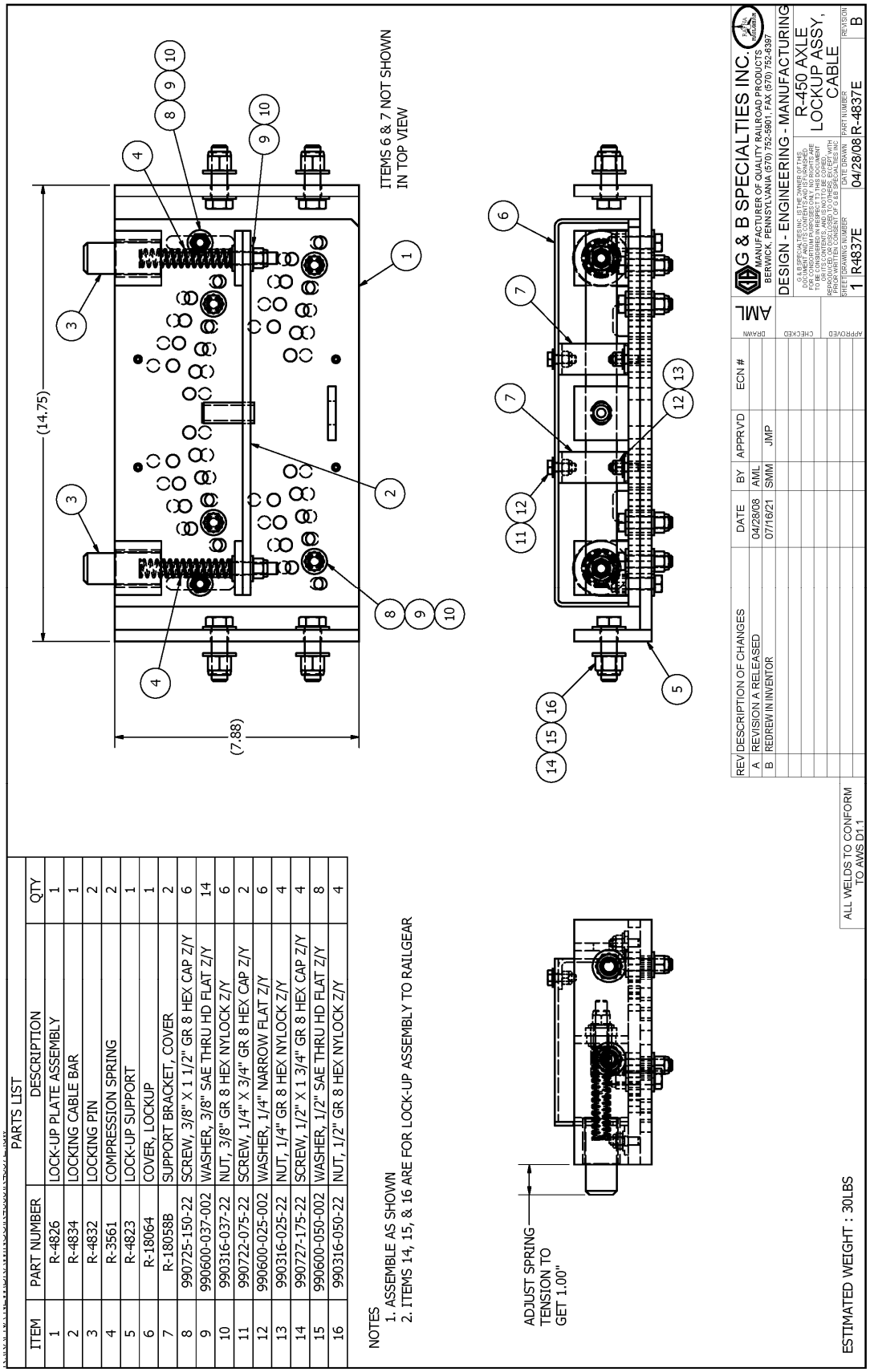

PARTS LIST

ITEM	PART NUMBER	DESCRIPTION	QTY
1	R-4826	LOCK-UP PLATE ASSEMBLY	1
2	R-4834	LOCKING CABLE BAR	1
3	R-4832	LOCKING PIN	2
4	R-3561	COMPRESSION SPRING	2
5	R-4823	LOCK-UP SUPPORT	1
6	R-18064	COVER, LOCKUP	1
7	R-18058B	SUPPORT BRACKET, COVER	2
8	990725-150-22	SCREW, 3/8" X 1 1/2" GR 8 HEX CAP Z/Y	6
9	990600-037-002	WASHER, 3/8" SAE THRU HD FLAT Z/Y	14
10	990316-037-22	NUT, 3/8" GR 8 HEX NYLOCK Z/Y	6
11	990722-075-22	SCREW, 1/4" X 3/4" GR 8 HEX CAP Z/Y	2
12	990600-025-002	WASHER, 1/4" NARROW FLAT Z/Y	6
13	990316-025-22	NUT, 1/4" GR 8 HEX NYLOCK Z/Y	4
14	990727-175-22	SCREW, 1/2" X 1 3/4" GR 8 HEX CAP Z/Y	4
15	990600-050-002	WASHER, 1/2" SAE THRU HD FLAT Z/Y	8
16	990316-050-22	NUT, 1/2" GR 8 HEX NYLOCK Z/Y	4

NOTES
1. ASSEMBLE AS SHOWN
2. ITEMS 14, 15, & 16 ARE FOR LOCK-UP ASSEMBLY TO RAILGEAR

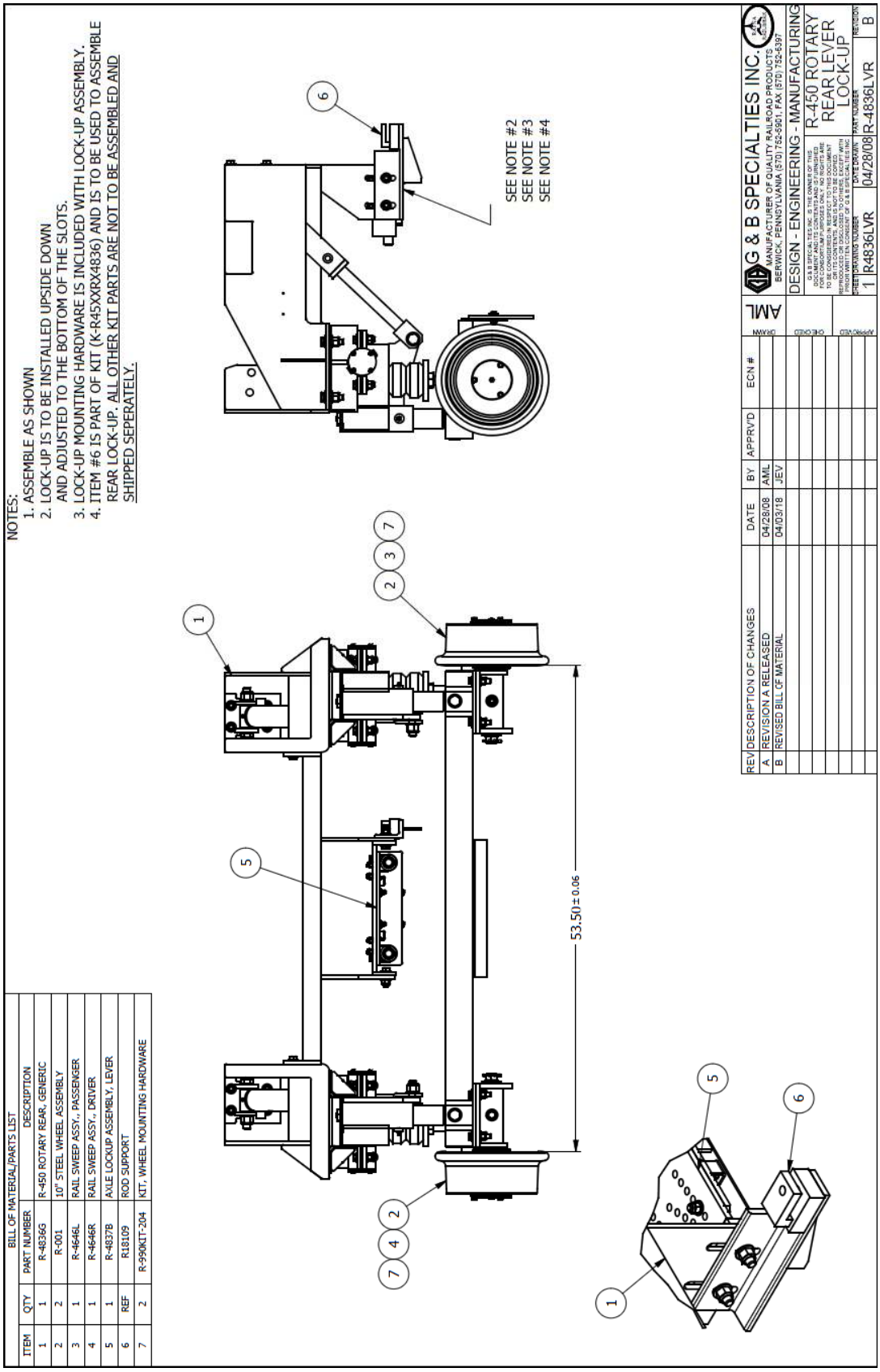

BILL OF MATERIAL/PARTS LIST

ITEM	QTY	PART NUMBER	DESCRIPTION
1	1	R-4836G	R-450 ROTARY REAR, GENERIC
2	2	R-001	10" STEEL WHEEL ASSEMBLY
3	1	R-4646L	RAIL SWEEP ASSY., PASSENGER
4	1	R-4646R	RAIL SWEEP ASSY., DRIVER
5	1	R-4837B	AXLE LOCKUP ASSEMBLY, LEVER
6	REF	R18109	ROD SUPPORT
7	2	R-990KIT-204	KIT, WHEEL MOUNTING HARDWARE

REV	DESCRIPTION OF CHANGES	DATE	BY	APPRV'D	ECN #
A	REVISION A RELEASED	04/28/08	AML		
B	REVISED BILL OF MATERIAL	04/03/18	JEV		

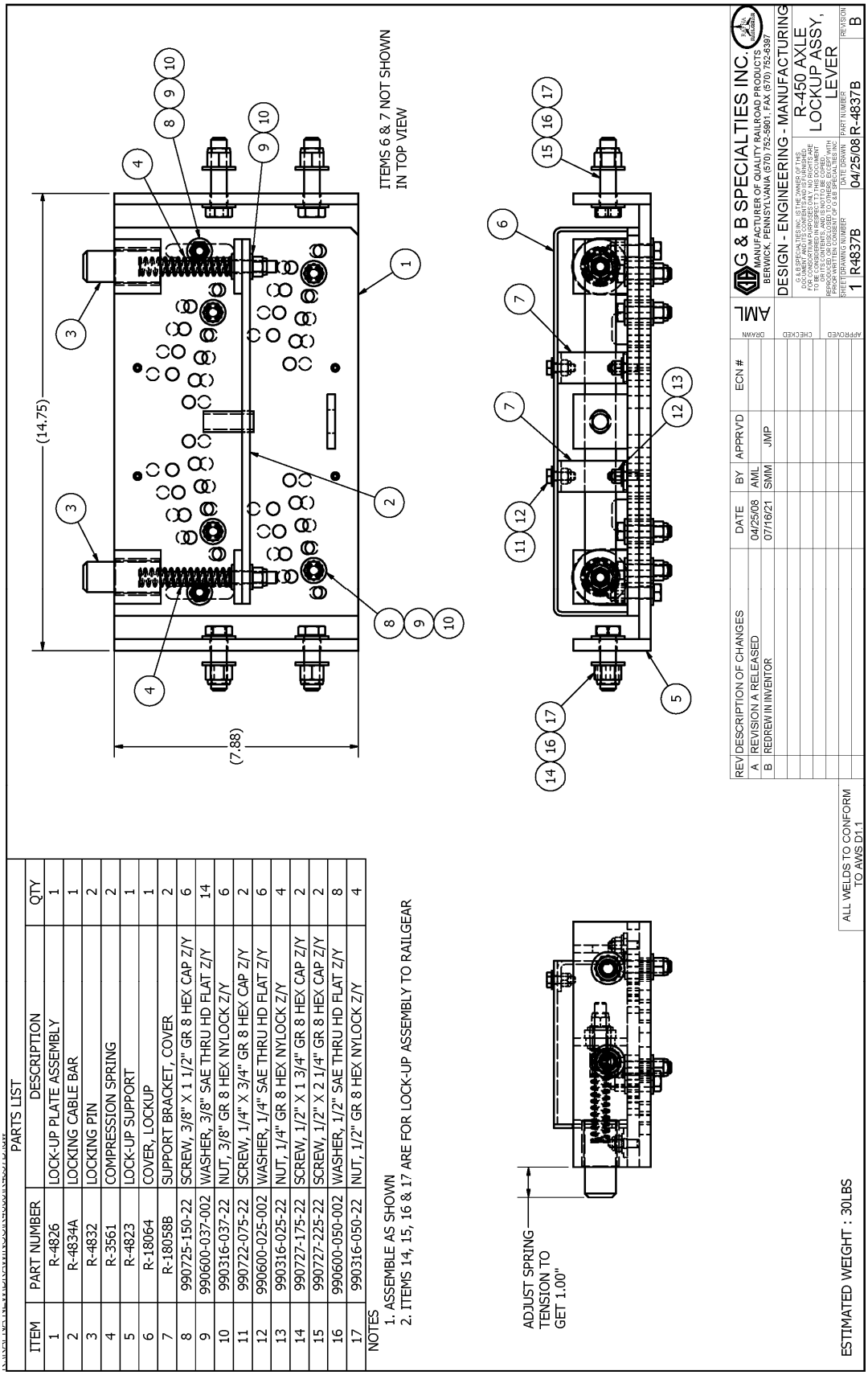

PARTS LIST

ITEM	PART NUMBER	DESCRIPTION	QTY
1	R-4826	LOCK-UP PLATE ASSEMBLY	1
2	R-4834A	LOCKING CABLE BAR	1
3	R-4832	LOCKING PIN	2
4	R-3561	COMPRESSION SPRING	2
5	R-4823	LOCK-UP SUPPORT	1
6	R-18064	COVER, LOCKUP	1
7	R-18058B	SUPPORT BRACKET, COVER	2
8	990725-150-22	SCREW, 3/8" X 1 1/2" GR 8 HEX CAP Z/Y	6
9	990600-037-002	WASHER, 3/8" SAE THRU HD FLAT Z/Y	14
10	990316-037-22	NUT, 3/8" GR 8 HEX NYLOCK Z/Y	6
11	990722-075-22	SCREW, 1/4" X 3/4" GR 8 HEX CAP Z/Y	2
12	990600-025-002	WASHER, 1/4" SAE THRU HD FLAT Z/Y	6
13	990316-025-22	NUT, 1/4" GR 8 HEX NYLOCK Z/Y	4
14	990727-175-22	SCREW, 1/2" X 1 3/4" GR 8 HEX CAP Z/Y	2
15	990727-225-22	SCREW, 1/2" X 2 1/4" GR 8 HEX CAP Z/Y	2
16	990600-050-002	WASHER, 1/2" SAE THRU HD FLAT Z/Y	8
17	990316-050-22	NUT, 1/2" GR 8 HEX NYLOCK Z/Y	4

NOTES
1. ASSEMBLE AS SHOWN
2. ITEMS 14, 15, 16 & 17 ARE FOR LOCK-UP ASSEMBLY TO RAILGEAR

ITEM	PART NO.	PART DESCRIPTION	QTY
1	R-4836G	ROTATING REAR RAILGEAR	1
2	R-001	10" WHEEL ASSEMBLY (RIGHT SIDE NOT SHOWN)	2
3	R-4646R	RAIL SWEEP - DRIVER (NOT SHOWN)	1
4	R-4646L	RAIL SWEEP - PASSENGER SIDE	1
5	S-001031	RAILGEAR OPERATION DECAL (NOT SHOWN)	1
6	-	1/2" UNC GR. 8 BOLT X 2.25" LONG	8
7	-	1/2" GR. 8 WASHER	16
8	-	1/2" UNC GR. 8 NYLOCK NUT	8
9	-	5/8" UNC GR. 8 BOLT X 2" LONG	6
10	-	5/8" GR. 8 WASHER	12
11	-	5/8" UNC GR. 8 NYLOCK NUT	6
12	-	3/4" UNC GR. 8 BOLT X 2.25" LONG	4
13	-	3/4" GR. 8 WASHER	8
14	-	3/4" UNC GR. 8 NYLOCK NUT	4
15	-	VEHICLE FRAME	N/A
16	R-4837A	LOCK-UP ASSEMBLY, HYDRAULIC	1
	R-4837B	LOCK-UP ASSEMBLY, LEVER	
	R-4837E	LOCK-UP ASSEMBLY, CABLE	

REAR OF VEHICLE

NOTE:
1. UNIT SHOWN WITHOUT LOCK-UP

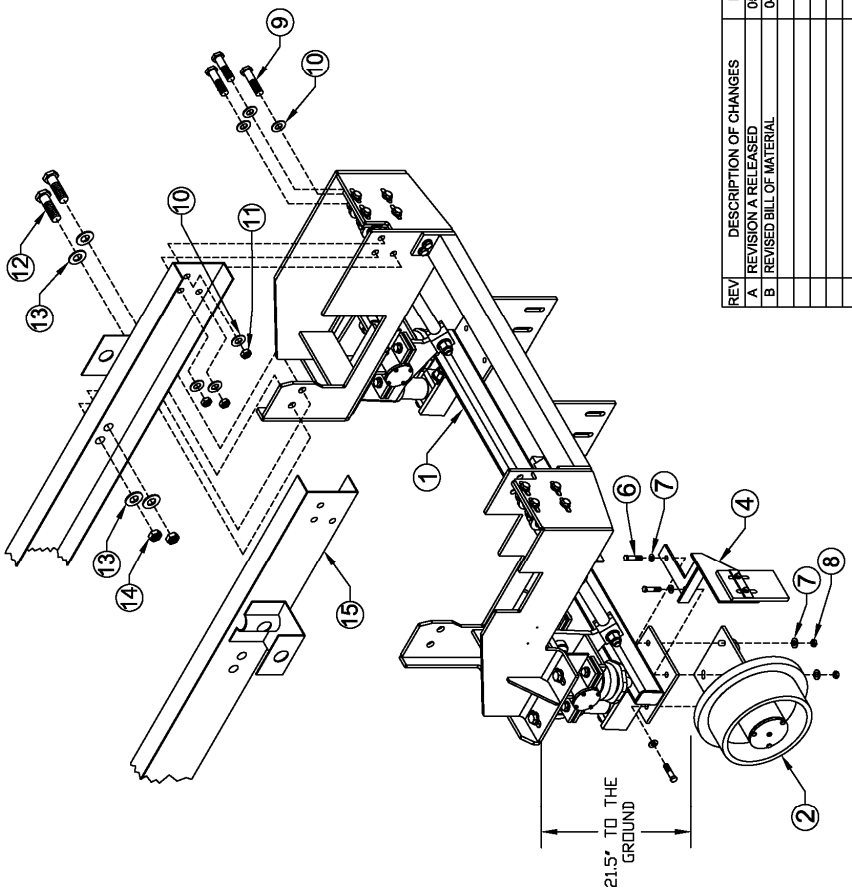

REV	DESCRIPTION OF CHANGES	DATE	BY	APPR'D	ECN #
A	REVISION A RELEASED	05/07/08	AML		
B	REVISED BILL OF MATERIAL	04/03/18	JEV		

DRAWN: AML
CHECKED: -
APPROVED: -

G & B SPECIALTIES INC.
MANUFACTURER OF QUALITY RAILROAD PRODUCTS
BERWICK, PENNSYLVANIA (570) 752-5901, FAX (570) 752-6397

DESIGN - ENGINEERING - MANUFACTURING

R-450 ROTATING RAILGEAR

SHEET	DRAWING NUMBER	DATE DRAWN	PART NUMBER	REVISION
1	R-4836G-1	05/07/08	R-4836G-1	B

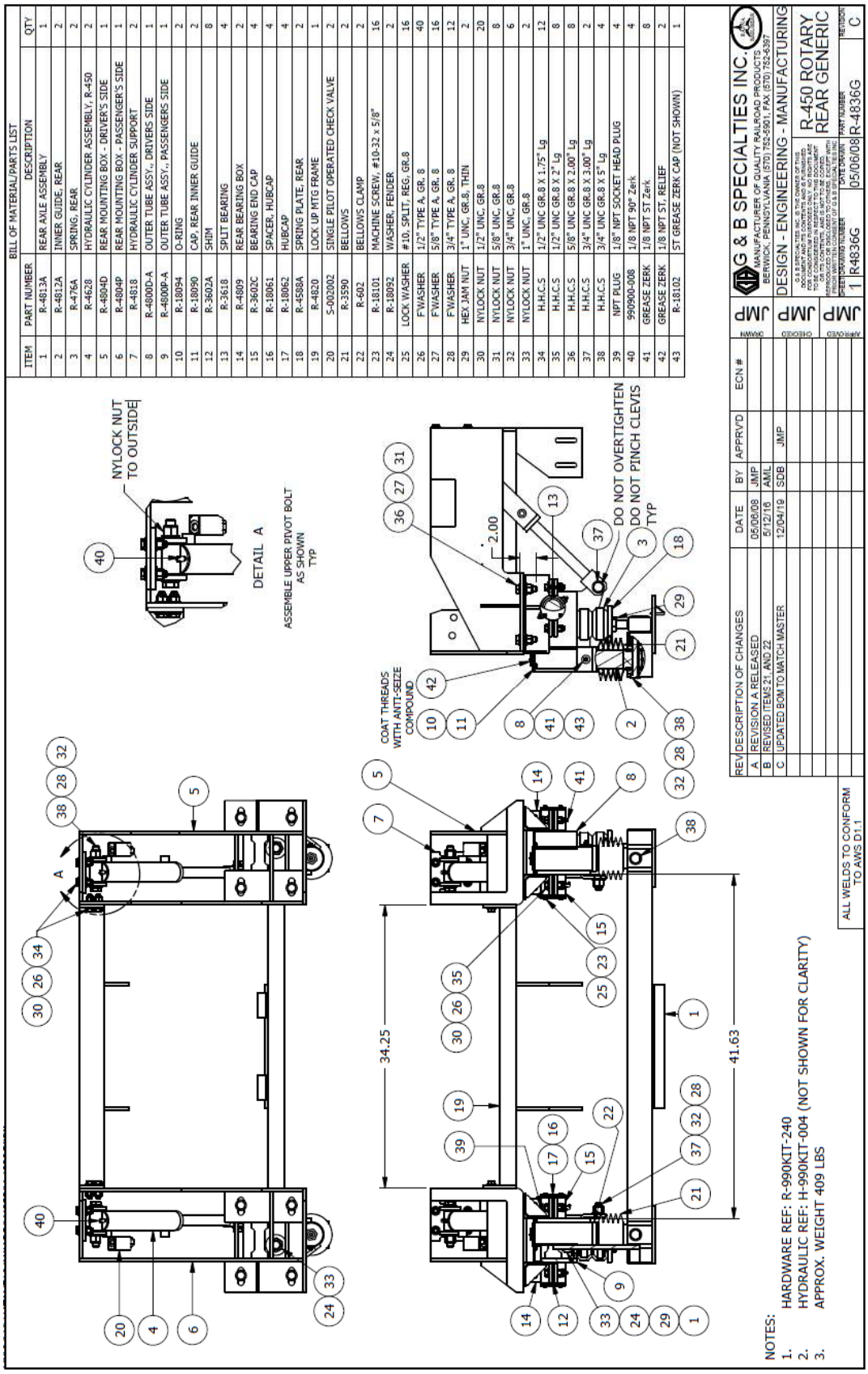

ITEM	PART NUMBER	DESCRIPTION	QTY
1	R-4813A	REAR AXLE ASSEMBLY	1
2	R-4812A	INNER GUIDE, REAR	2
3	R-476A	SPRING, REAR	2
4	R-4628	HYDRAULIC CYLINDER ASSEMBLY, R-450	2
5	R-4804D	REAR MOUNTING BOX - DRIVER'S SIDE	1
6	R-4804P	REAR MOUNTING BOX - PASSENGER'S SIDE	1
7	R-4818	HYDRAULIC CYLINDER SUPPORT	2
8	R-4800D-A	OUTER TUBE ASSY., DRIVERS SIDE	1
9	R-4800P-A	OUTER TUBE ASSY., PASSENGERS SIDE	1
10	R-18094	O-RING	2
11	R-18090	CAP, REAR INNER GUIDE	2
12	R-3602A	SHIM	8
13	R-3618	SPLIT BEARING	4
14	R-4809	REAR BEARING BOX	2
15	R-3602C	BEARING END CAP	4
16	R-18061	SPACER, HUBCAP	4
17	R-18062	HUBCAP	4
18	R-4588A	SPRING PLATE, REAR	2
19	R-4820	LOCK UP MTG FRAME	1
20	S-002002	SINGLE PILOT OPERATED CHECK VALVE	2
21	R-3590	BELLOWS	2
22	R-602	BELLOWS CLAMP	2
23	R-18101	MACHINE SCREW, #10-32 x 5/8"	16
24	R-18092	WASHER, FENDER	2
25	LOCK WASHER	#10, SPLIT, REG. GR.8	16
26	FWASHER	1/2" TYPE A, GR. 8	40
27	FWASHER	5/8" TYPE A, GR. 8	16
28	FWASHER	3/4" TYPE A, GR. 8	12
29	HEX JAM NUT	1" UNC, GR.8, THIN	2
30	NYLOCK NUT	1/2" UNC, GR.8	20
31	NYLOCK NUT	5/8" UNC, GR.8	8
32	NYLOCK NUT	3/4" UNC, GR.8	6
33	NYLOCK NUT	1" UNC, GR.8	2
34	H.H.C.S	1/2" UNC GR.8 X 1.75" Lg	12
35	H.H.C.S	1/2" UNC GR.8 X 2" Lg	8
36	H.H.C.S	5/8" UNC GR.8 X 2.00" Lg	8
37	H.H.C.S	3/4" UNC GR.8 X 3.00" Lg	2
38	H.H.C.S	3/4" UNC GR.8 X 5" Lg	4
39	NPT PLUG	1/8" NPT SOCKET HEAD PLUG	4
40	990900-008	1/8 NPT 90° Zerk	4
41	GREASE ZERK	1/8 NPT ST Zerk	8
42	GREASE ZERK	1/8 NPT ST, RELIEF	2
43	R-18102	ST GREASE ZERK CAP (NOT SHOWN)	1

REV	DESCRIPTION OF CHANGES	DATE	BY	APPRVD	ECN #
A	REVISION A RELEASED	06/06/08	JMP		
B	REVISED ITEMS 21, AND 22	5/12/16	AML		
C	UPDATED BOM TO MATCH MASTER	12/04/19	SDB	JMP	

NOTES:
1. HARDWARE REF: R-990KIT-240
2. HYDRAULIC REF: H-990KIT-004 (NOT SHOWN FOR CLARITY)
3. APPROX. WEIGHT 409 LBS

NOTES:
1. ASSEMBLE AS SHOWN.
2. BEARINGS ARE TO BE PACKED WITH GREASE AT ASSEMBLY. USE MYSTIK JT-6 LOW TEMP GREASE OR EQUIVELANT.
3. BEARING TORQUE PROCEDURE:
   A.) While rotating the rail wheel forward, torque the bearing nut to 20 ft-lbs., loosen nut and repeat.
   B.) Loosen the bearing nut and re-torque to 6 ft-lbs.
   C.) Check bearing end play with a magnetic dial indicator. End play should be within 0.001" - 0.005"
   D.) If bearing end play is not within the required specification, bearings should be re-torqued following the procedure outlined in steps A thru C.

BILL OF MATERIAL/PARTS LIST

ITEM	QTY	PART NUMBER	DESCRIPTION
1	1	R-001D	10" WHEEL SUB-ASSEMBLY, MODIFIED ASSEMBLY
2	2	R-010	TAPERED ROLLER BEARING CONE (LM104949)
3	1	R-011	TAPERED ROLLER BEARING CUP (LM104911)
4	1	R-014	SLOTTED WASHER
5	1	R-009	OIL SEAL (#471271)
6	1	R-017A	10" WHEEL Gasket
7	1	R-020	10" STEEL WHEEL
8	1	R-017	HUB CAP ASSEMBLY (10" WHEEL)
9	1	990900-009	FITTING, 1/8" STR PTF
10	3	990722-075-22F	SCREW, 1/4"-28 X 3/4" GR 8 HEX Z/Y
11	3	990402-025-02	WASHER, 1/4" HVY LOCK Z/Y
12	1	990507-125-02	COTTER PIN, 5/32" X 1 1/4" Z/Y
13	1	R-016	NUT, 3/4"-16 UNF REG HEX SLOTTED Z/Y

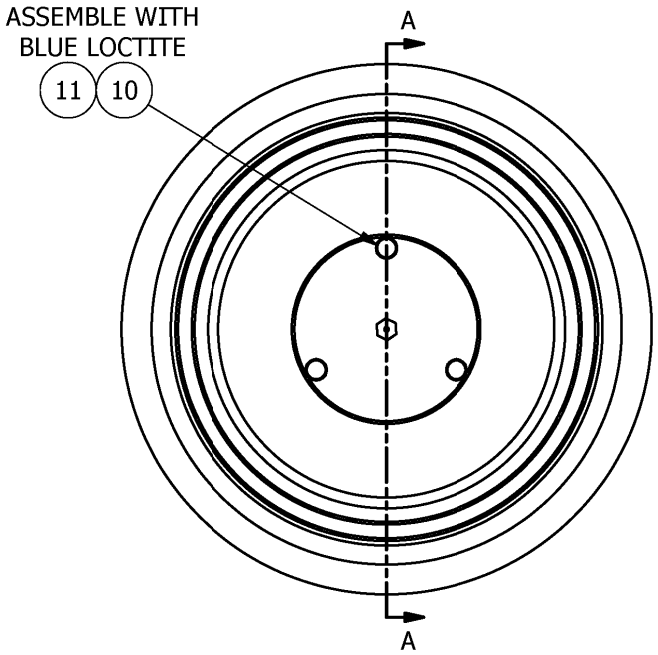

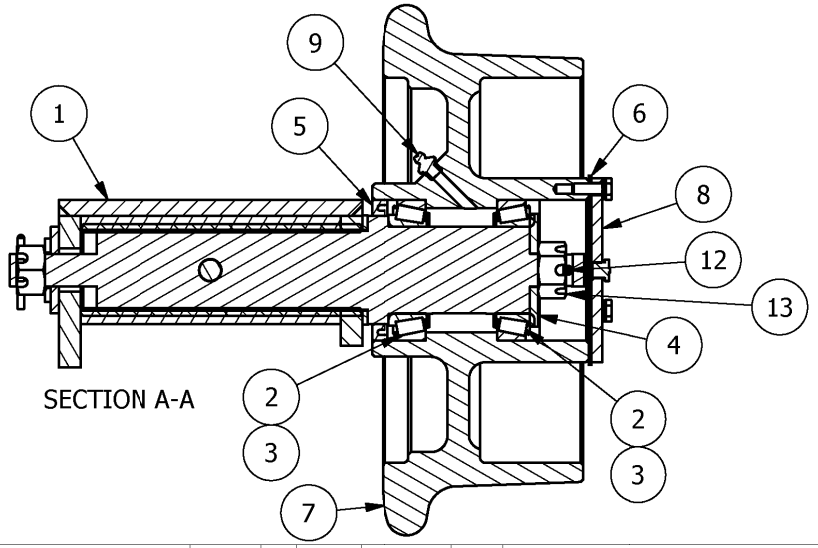

REV	DESCRIPTION OF CHANGES	DATE	BY	APPRV'D	ECN #
E	ADDED ITEM #1 ; REVISED BOM	12/01/06	AML		
F	UPDATED BOM AND BOARDER	08/14/17	SMM	JMP	ECN-17-466
G	ADDED NOTE ON WHEEL HUB	05/22/18	JEV	JMP	ECN-18-423
H	REVISED DRAWING, ADDED GREASE NOTE	04/14/21	SMM	JMP	ECN-21-210

DRAWN: AML
CHECKED:
APPROVED:

G & B SPECIALTIES INC.
MANUFACTURER OF QUALITY RAILROAD PRODUCTS
BERWICK, PENNSYLVANIA (570) 752-5901, FAX (570) 752-6397
DESIGN - ENGINEERING - MANUFACTURING

10" WHEEL ASSEMBLY

SHEET	DRAWING NUMBER	DATE DRAWN	PART NUMBER	REVISION
1	R001	12/01/06	R-001	H

BILL OF MATERIAL/PARTS LIST

ITEM	PART NUMBER	DESCRIPTION	QTY
1	R-001C	10" WHEEL SUN-ASSEMBLY MODIFICATION	1
2	R-6505	SPINDLE BUSHING	2
3	NULOCK NUT	1/2"-13, GR.8	1
4	F'WASHER	1/2" TYPE-A, GR. 8	3
5	H.H.C.S.	1/2" UNC GR.8 x 4.00" Lg.	1

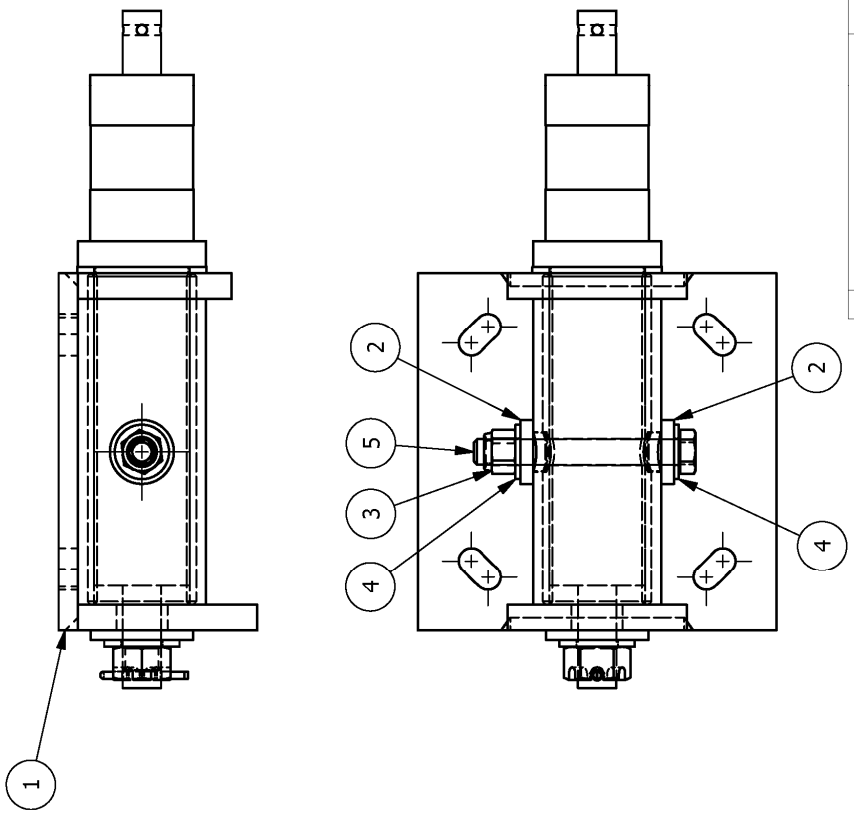

REV	DESCRIPTION OF CHANGES	DATE	BY	APPRVD	ECN #
A	REVISION A RELEASED	12/01/06	AML		
B	UPDATED BORDER	07/16/21	SMM	JMP	ECN-21-456

ALL WELDS TO CONFORM TO AWS D1.1

DRAWN: AML
CHECKED:
APPROVED:

G & B SPECIALTIES INC.
MANUFACTURER OF QUALITY RAILROAD PRODUCTS
BERWICK, PENNSYLVANIA (570) 752-5901; FAX (570) 752-6397

DESIGN - ENGINEERING - MANUFACTURING

10" WHEEL SUB ASSY, MODIFIED

SHEET	DRAWING NUMBER	DATE DRAWN	PART NUMBER	REVISION
1	R001D	12/01/06	R-001D	B

MIO-R45XRFR4836 Rev F

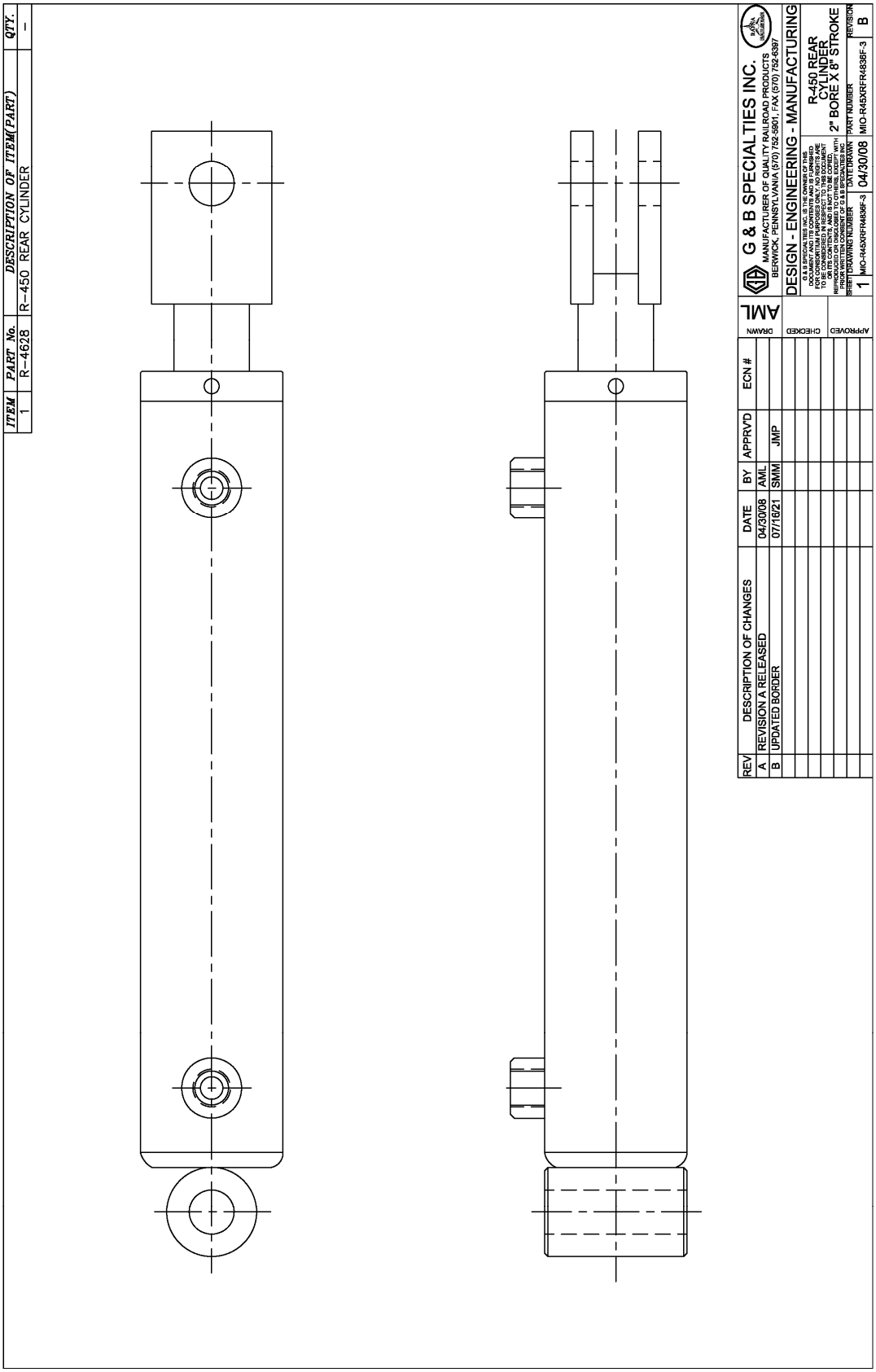

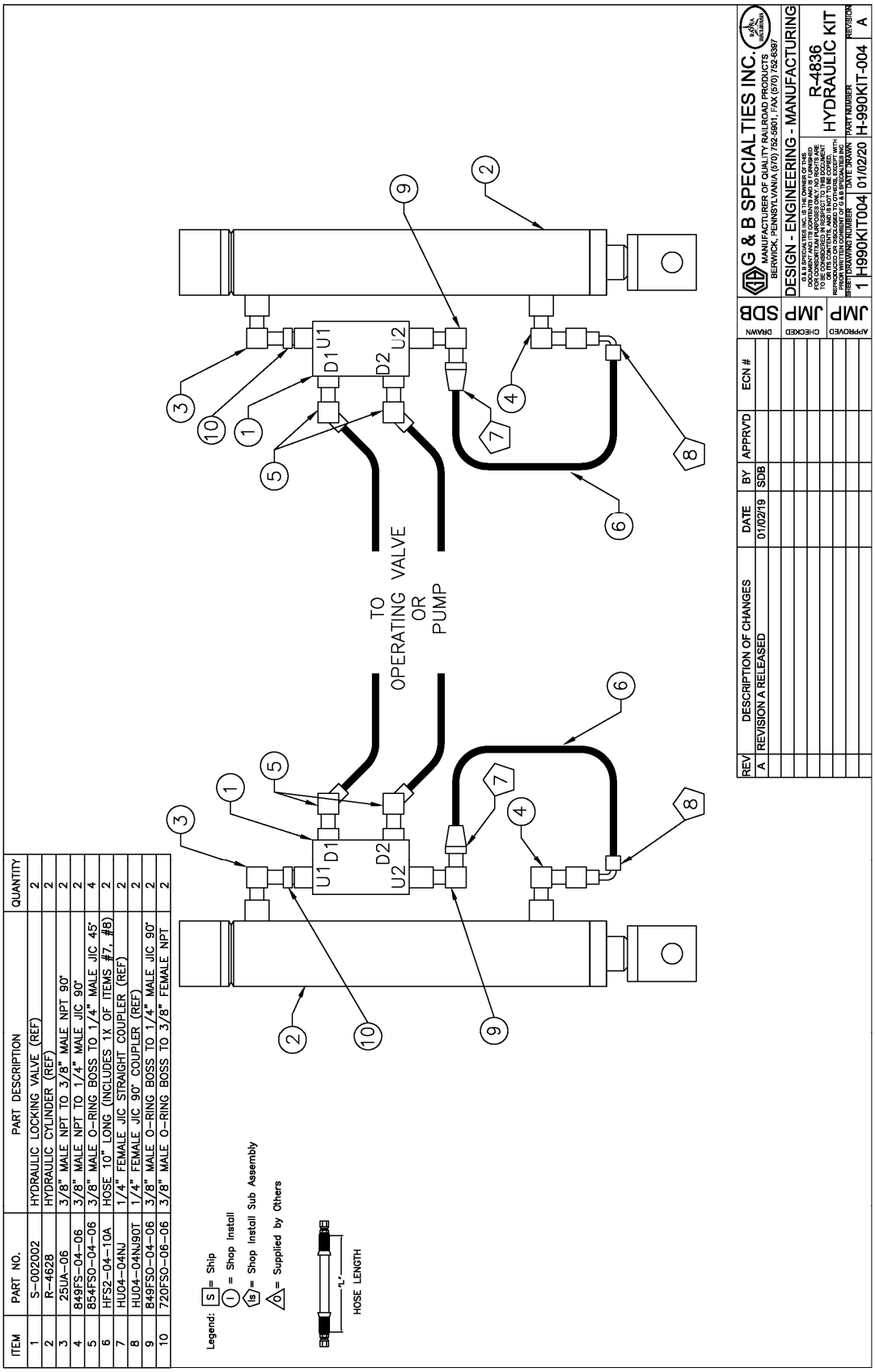

ITEM	PART NO.	PART DESCRIPTION	QUANTITY
1	S-002002	HYDRAULIC LOCKING VALVE (REF)	2
2	R-4628	HYDRAULIC CYLINDER (REF)	2
3	25UA-06	3/8" MALE NPT TO 3/8" MALE NPT 90°	2
4	849FS-04-06	3/8" MALE NPT TO 1/4" MALE JIC 90°	2
5	854FSO-04-06	3/8" MALE O-RING BOSS TO 1/4" MALE JIC 45°	4
6	HFS2-04-10A	HOSE 10" LONG (INCLUDES 1X OF ITEMS #7, #8)	2
7	HU04-04NJ	1/4" FEMALE JIC STRAIGHT COUPLER (REF)	2
8	HU04-04NJ90T	1/4" FEMALE JIC 90° COUPLER (REF)	2
9	849FSO-04-06	3/8" MALE O-RING BOSS TO 1/4" MALE JIC 90°	2
10	720FSO-06-06	3/8" MALE O-RING BOSS TO 3/8" FEMALE NPT	2

Legend:
S = Ship
I = Shop Install
IS = Shop Install Sub Assembly
O = Supplied by Others

REV	DESCRIPTION OF CHANGES	DATE	BY	APPRV'D	ECN #
A	REVISION A RELEASED	01/02/19	SDB		

DRAWN SDB
CHECKED JMP
APPROVED JMP

G & B SPECIALTIES INC.
MANUFACTURER OF QUALITY RAILROAD PRODUCTS
BERWICK, PENNSYLVANIA (570) 752-5901 / FAX (570) 752-6397

DESIGN - ENGINEERING - MANUFACTURING

R-4836
HYDRAULIC KIT

SHEET	DRAWING NUMBER	DATE DRAWN	PART NUMBER	REVISION
1	H990KIT004	01/02/20	H-990KIT-004	A

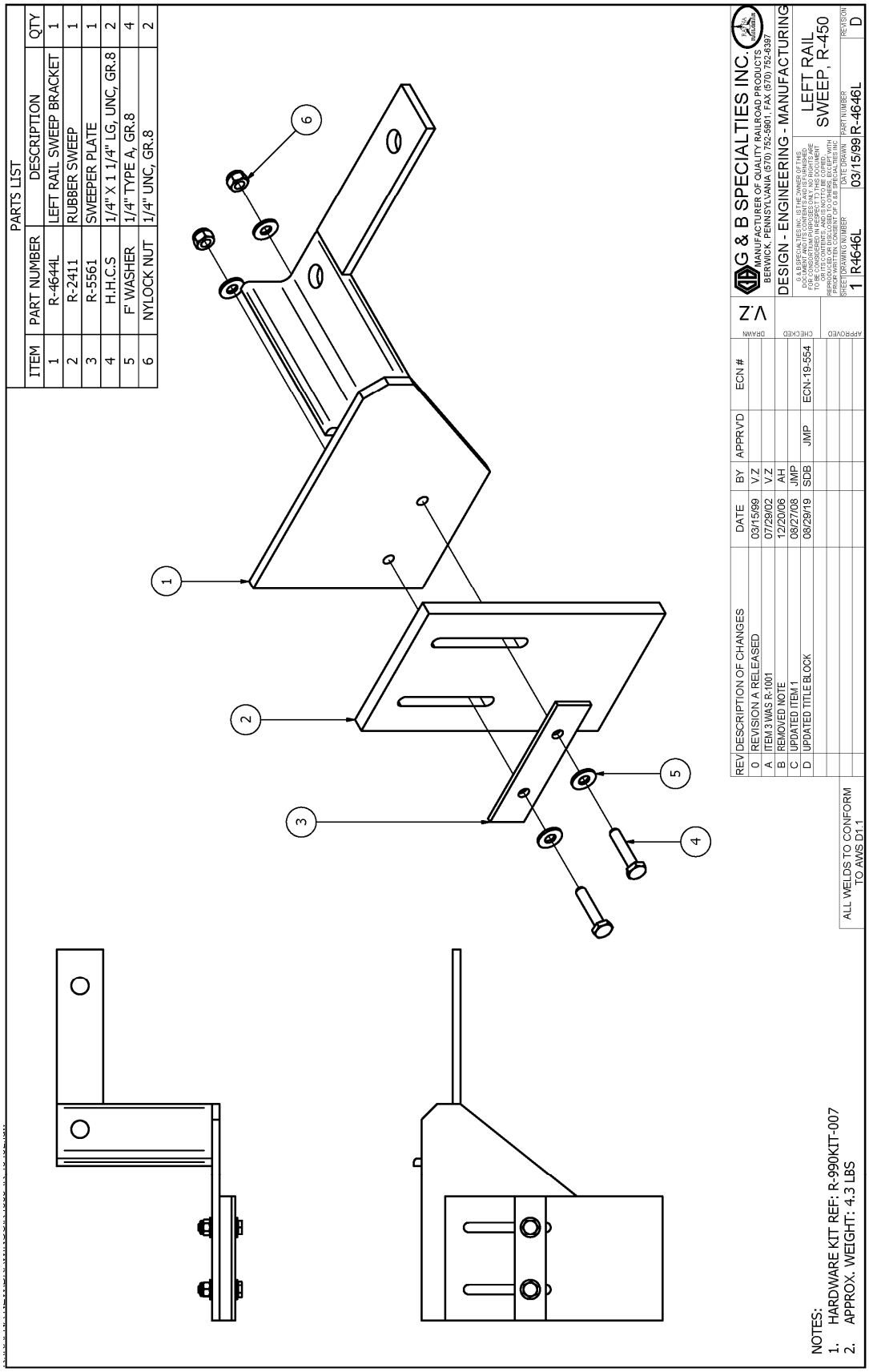
PARTS LIST
ITEM | PART NUMBER | DESCRIPTION | QTY
1 | R-4644L | LEFT RAIL SWEEP BRACKET | 1
2 | R-2411 | RUBBER SWEEP | 1
3 | R-5561 | SWEEPER PLATE | 1
4 | H.H.C.S | 1/4" X 1 1/4" LG, UNC, GR.8 | 2
5 | F' WASHER | 1/4" TYPE A, GR.8 | 4
6 | NYLOCK NUT | 1/4" UNC, GR.8 | 2
1
2
3
4
5
6
REV | DESCRIPTION OF CHANGES | DATE | BY | APPRV'D | ECN #
0 | REVISION A RELEASED | 03/15/99 | V.Z
A | ITEM 3 WAS R-1001 | 07/29/02 | V.Z
B | REMOVED NOTE | 12/20/06 | AH
C | UPDATED ITEM 1 | 08/27/08 | JMP
D | UPDATED TITLE BLOCK | 08/29/19 | SDB | JMP | ECN-19-554
DRAWN V.Z
CHECKED
APPROVED
G & B SPECIALTIES INC.
MANUFACTURER OF QUALITY RAILROAD PRODUCTS
BERWICK, PENNSYLVANIA (570) 752-5901, FAX (570) 752-6397
DESIGN - ENGINEERING - MANUFACTURING
LEFT RAIL SWEEP, R-450
SHEET 1 DRAWING NUMBER R-4646L DATE DRAWN 03/15/99 PART NUMBER R-4646L REVISION D
ALL WELDS TO CONFORM TO AWS D1.1
NOTES:
1. HARDWARE KIT REF: R-990KIT-007
2. APPROX. WEIGHT: 4.3 LBS

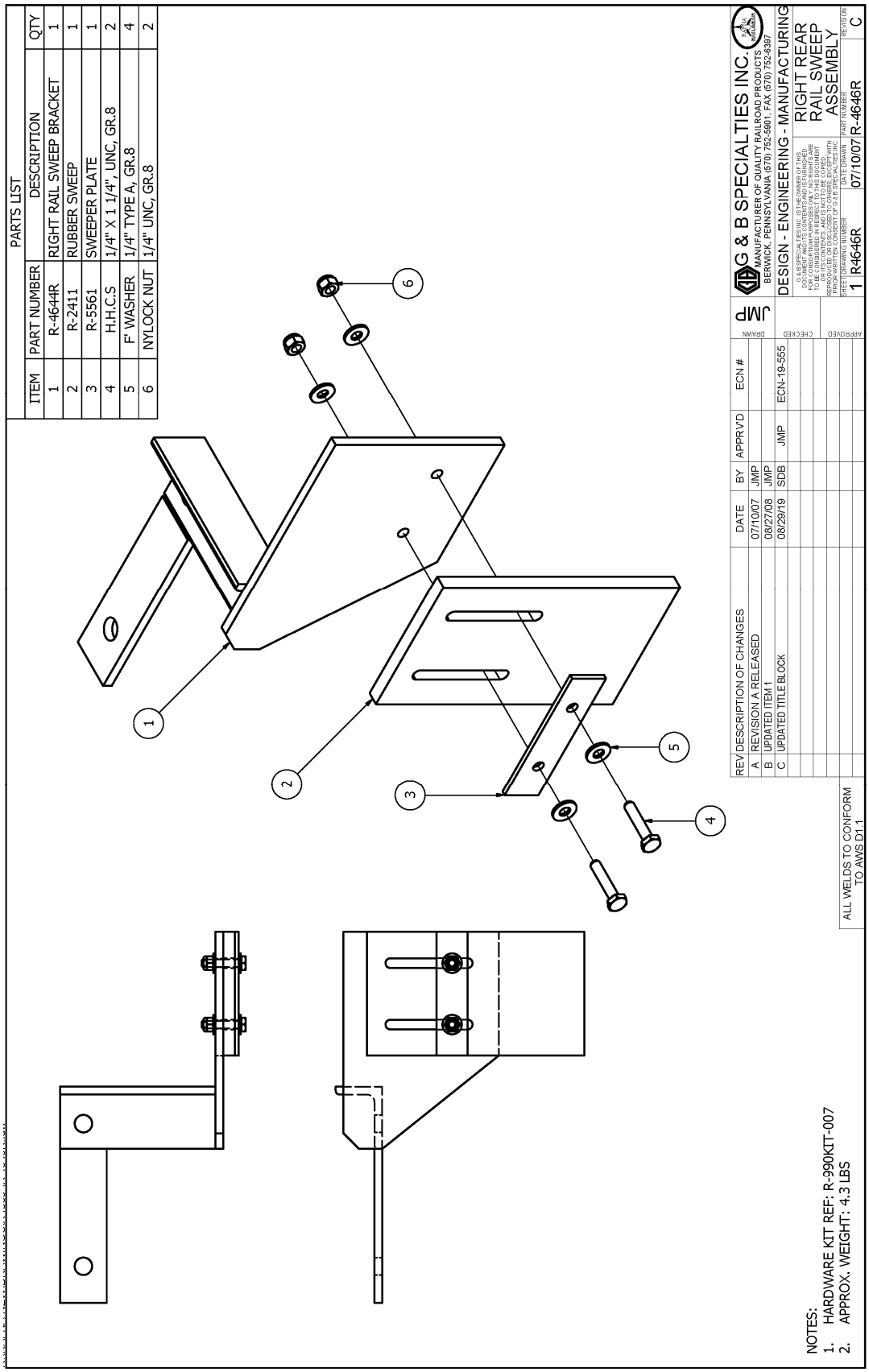
PARTS LIST
ITEM | PART NUMBER | DESCRIPTION | QTY
1 | R-4644R | RIGHT RAIL SWEEP BRACKET | 1
2 | R-2411 | RUBBER SWEEP | 1
3 | R-5561 | SWEEPER PLATE | 1
4 | H.H.C.S | 1/4" X 1 1/4", UNC, GR.8 | 2
5 | F' WASHER | 1/4" TYPE A, GR.8 | 4
6 | NYLOCK NUT | 1/4" UNC, GR.8 | 2
1
2
3
4
5
6
REV | DESCRIPTION OF CHANGES | DATE | BY | APPR'VD | ECN #
A | REVISION A RELEASED | 07/10/07 | JMP
B | UPDATED ITEM 1 | 08/27/08 | JMP
C | UPDATED TITLE BLOCK | 08/29/19 | SDB | JMP | ECN-19-555
DRAWN JMP
CHECKED
APPROVED
G & B SPECIALTIES INC.
MANUFACTURER OF QUALITY RAILROAD PRODUCTS
BERWICK, PENNSYLVANIA (570) 752-5901; FAX (570) 752-6397
DESIGN - ENGINEERING - MANUFACTURING
RIGHT REAR RAIL SWEEP ASSEMBLY
SHEET 1 | DRAWING NUMBER R4646R | DATE DRAWN 07/10/07 | PART NUMBER R-4646R | REVISION C
ALL WELDS TO CONFORM TO AWS D1.1
NOTES:
1. HARDWARE KIT REF: R-990KIT-007
2. APPROX. WEIGHT: 4.3 LBS