Wabtec Components LLC.
G&B Specialties, Inc.

MIO-290 Rev H

RAFNA R-290 RAILGEAR
STANDARD / IN-CAB / FULL IN-CAB CONTROLS

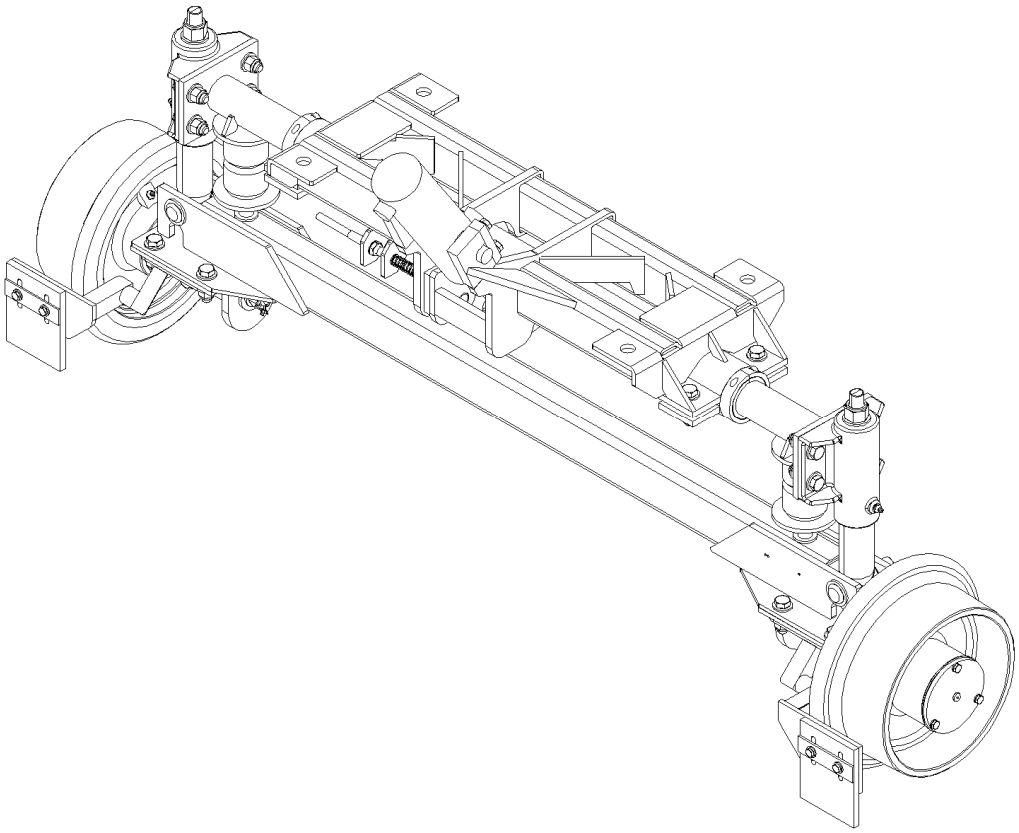

Installation / Operations / Service Manual

G&B Specialties Inc. 535 West 3rd Street, Berwick, PA, USA Tel: **(570) 752-5901** Fax: **(570) 752-6397** US Field Service: **570-441-6988**; CAN Field Service **570-854-0482**; **www.rafna.com**

FRONT AND REAR RAILGEAR KIT INSTALLATION

INSTALLATION SAFETY PRECAUTIONS

If any installation problems are encountered, please call G&B Specialties, Inc. for technical assistance before continuing with the installation process.

CAUTION
WARNING

- Failure to heed to any of the following warnings could result in severe bodily injury and/or equipment damage.
- Read and understand this manual completely before attempting installation of the equipment.
- Installation instructions provided below only address the RAFNA railgear equipment. Applicable railway company procedures and policies must be adhered to.
- Before performing any work under the vehicle or railgear, ensure the engine is turned off and the parking brake is set.
- Beware of all pinch points on the railgear and keep all parts of the body clear.
- Always disconnect the vehicle's battery when welding on the vehicle or railgear in order to protect the vehicle's electrical system.
- Max vehicle speed on rail not to exceed 45 MPH.

CAUTION
WARNING

PLEASE READ ALL OF THE FOLLOWING TSBs & BULLETINS PRIOR TO INSTALLATION

TECHNICAL REFERENCE BULLETIN RAFNA RAILGEAR			
ISSUE DATE:	**6/23/14**	**TRB NUMBER:**	**TRB-062314**

HAZARD / URGENCY RATING	
X	**DANGER - Physical harm is possible if TSB is not observed or followed**
X	**WARNING - Equipment damage is possible if TSB is not observed or followed**
X	**CAUTION - Essential issue affecting operation, service, parts or installation**
X	**INFORMATIONAL - Advisory which may be of interest**

APPLICABLE EQUIPMENT:

All RAFNA rail gear models

SUMMARY:

Uncontrolled re-use of railgear hardware.

IMPACT:

Excessive reuse of assembly/installation hardware can cause the hardware to loosen and or fail under certain circumstances.

ACTION:

Any **nylock nut** that is removed from any part or component of any RAFNA railgear unit, for any reason, is to be replaced with a new, equivalent **nylock nut**. Substitution of the original nut is not acceptable…. ie… a nylock nut is to be replaced with an equivalent nylock nut and **substituting any other type of lock nut is not acceptable.**

Any stover **nut (crown nut, top lock nut, deformed thread nut)** that is removed from any part or component of any RAFNA railgear unit, for any reason, is to be replaced with a new, equivalent **stover nut (crown nut, top lock nut, deformed thread nut) along with the bolt/screw being used with that nut**. Substitution of the original nut is not acceptable…. ie… a stover nut is to be replaced with an equivalent stover nut and **substituting any other type of lock nut is not acceptable.**

TECHNICAL SERVICE BULLETIN RAFNA RAILGEAR			
ISSUE DATE:	**June 17, 2013**	**TSB NUMBER:**	**TSB-190**

HAZARD / URGENCY RATING	
X	**DANGER - Physical harm is possible if TSB is not observed or followed**
X	**WARNING - Equipment damage is possible if TSB is not observed or followed**
X	**CAUTION - Essential issue affecting operation, service, parts or installation**
X	**INFORMATIONAL - Advisory which may be of interest**

APPLICABLE EQUIPMENT:

R290 Railgear

SUMMARY:

Wear at the Inner Guide Tube Axle Guide Tube Pin area on the Axle has been found at various degrees of wear depending upon age of unit and amount of Maintenance performed on Railgear.

IMPACT:

Excessive wear in this area can lead to an axle failure.

ACTION:

Inspect this area as follows to determine the amount of wear acceptable before axle change is required:

Primary method of Inspection

Inspect vehicle as close to actual use by means of, rail, alignment rack, two by fours or steel tubing. Deploy railgear and observe or measure axle movement at the Axle Guide Pin Location.

You can have 1/8” of wear in both the up and down direction from center line of the Axle Guide Pin. This would be a total of 1/8” up from center and 1/8” down from center, for a total of ¼” wear. If the ¼” wear is all up from center or all down from center, then this would not be acceptable. If axle is out of specifications replace with Axle R-2930.
Pin should show no wear. If pin shows wear replace with P/N, R990KIT-353.

Alternate method for inspection

Lower Railgear until it is resting on the ground without any load being applied to it. Remove 5/32” cotter pin and slide bellows out of the way, then remove Guide Tube Pin. Now inspect axle and pin for wear. Replace pin and cotter pin and proceed to other end of axle and repeat inspection process. Replacement process for pin wear and axle wear is as follows:

If pin shows wear replace with P/N, R-990KIT-353. Use Alternate Method of Inspection drawing which shows limits of wear for slots and holes. Use appropriate measuring tools to perform the required measurement. Measuring tools will vary from location to location. If Axle is out of specifications replace with Axle R-2930. If Guide Tube Pin, P/N R-2949 has any wear replace with R290 Axle Repair Kit, P/N R990KIT-353

Attached to this TSB is a revised copy of G&B Specialties FRA Inspection for R290 Railgear. This revised FRA Inspection form is issued to insure that the (Rafna) G&B Specialties R290 Railgear is inspected and serviced correctly. Items of concern which can create premature wear and failure to the axle in the area of the guide pin, but not limited to, are as follows:

- **Improper over center adjustment of the Railgear, over center must be 3°~5° Max.**
- **Hi-Rail wheel loads should be set at 450lbs. Min / 750lbs. Max.**
- **Wheel wear must be checked using P/N S-001200; wear on wheel must fall within specifications called out on Wear Gauge.**
- **The GVWR of the vehicle must be maintained to insure that the R290 is not overloaded.**

G&B Specialties contact number for replacement parts:
Phone 570-752-5901 Ext 135

G&B Specialties contact number for Technical assistance:
USA Phone Number, 570-752-5901 Ext 127
Cell Number 570-441-6988

G&B Specialties contact number for Technical assistance:
Canada Phone Number 570-854-0482

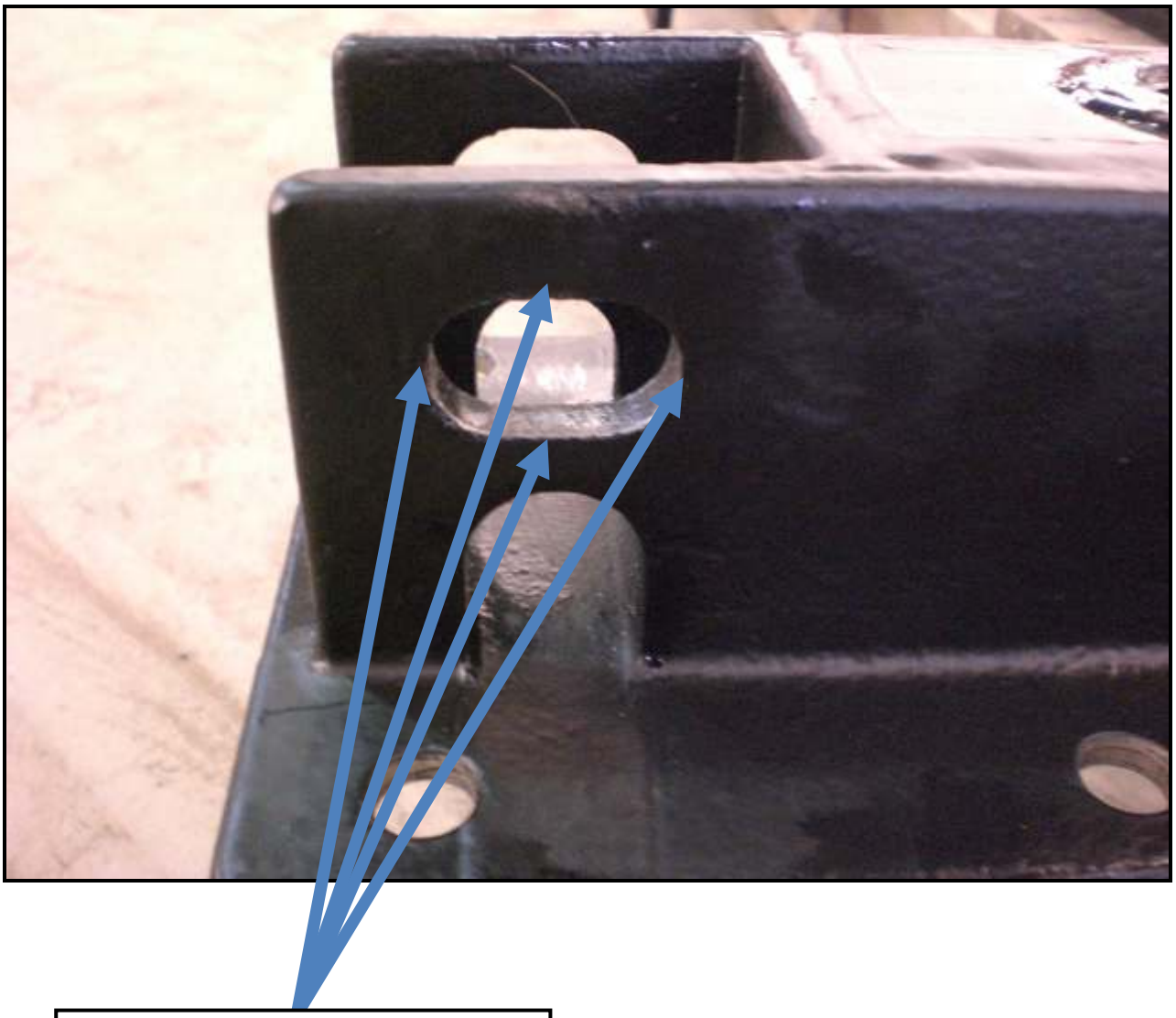

AREA SUBJECT TO WEAR

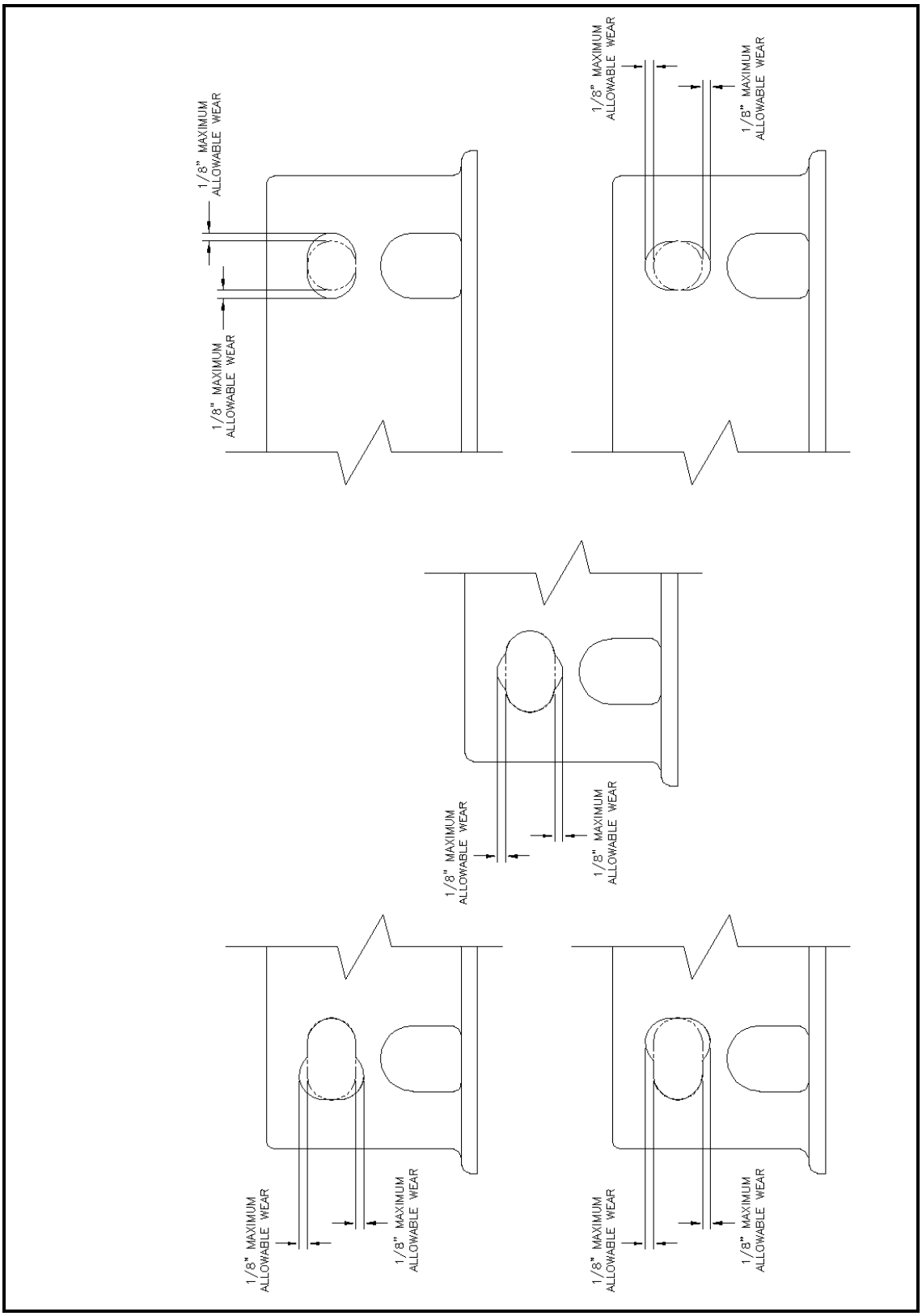
1/8" MAXIMUM ALLOWABLE WEAR
1/8" MAXIMUM ALLOWABLE WEAR
1/8" MAXIMUM ALLOWABLE WEAR
1/8" MAXIMUM ALLOWABLE WEAR
1/8" MAXIMUM ALLOWABLE WEAR
1/8" MAXIMUM ALLOWABLE WEAR
1/8" MAXIMUM ALLOWABLE WEAR
1/8" MAXIMUM ALLOWABLE WEAR

TECHNICAL SERVICE BULLETIN
RAFNA RAILGEAR

ISSUE DATE:	**6/23/14**	**TSB NUMBER:**	**TSB-192**

HAZARD / URGENCY RATING

X	**DANGER - Physical harm is possible if TSB is not observed or followed**
X	**WARNING - Equipment damage is possible if TSB is not observed or followed**
X	**CAUTION - Essential issue affecting operation, service, parts or installation**
X	**INFORMATIONAL - Advisory which may be of interest**

APPLICABLE EQUIPMENT:

R-290

SUMMARY:

When the axle Stover nut is used too many times, it loses the ability to maintain the proper torque. If the Stover nut is used too many times it is prone to loosening and falling off. For this reason, a one-time application is being required.

Due to size variance of the grommets on the bellows it is necessary to compress to dimensions shown in order to maintain a consistent distance across the head of the axle bolt and the axle Stover nut. After the grommet has been compressed an additional washer has to be added to also maintain a consistent distance.

IMPACT:

Failure to replace the nuts and bolts can cause the nut to fall off and the axle bolt to fall out of the axle.

Failure to maintain the proper assembly distance between the axle Stover nut and the head of the bolt can cause either too much or too little movement in the axle bushings.

ACTION:

New OEM fastener kit (R-990KIT-345) must be used when changing out axles and or doing any kind of repair work where bolts and nuts are removed. This fastener kit will be included when new replacement axles are ordered.

Axle Stover nut and bolt will be a one use only application. When new nuts and bolts are replaced use red high strength lock tight.

The grommets on the bellows will have to be compressed within tolerances listed on drawing number R2930RW ASSY (see sheet below). An additional washer is to be added between the bushing and the compressed bellows as shown below.

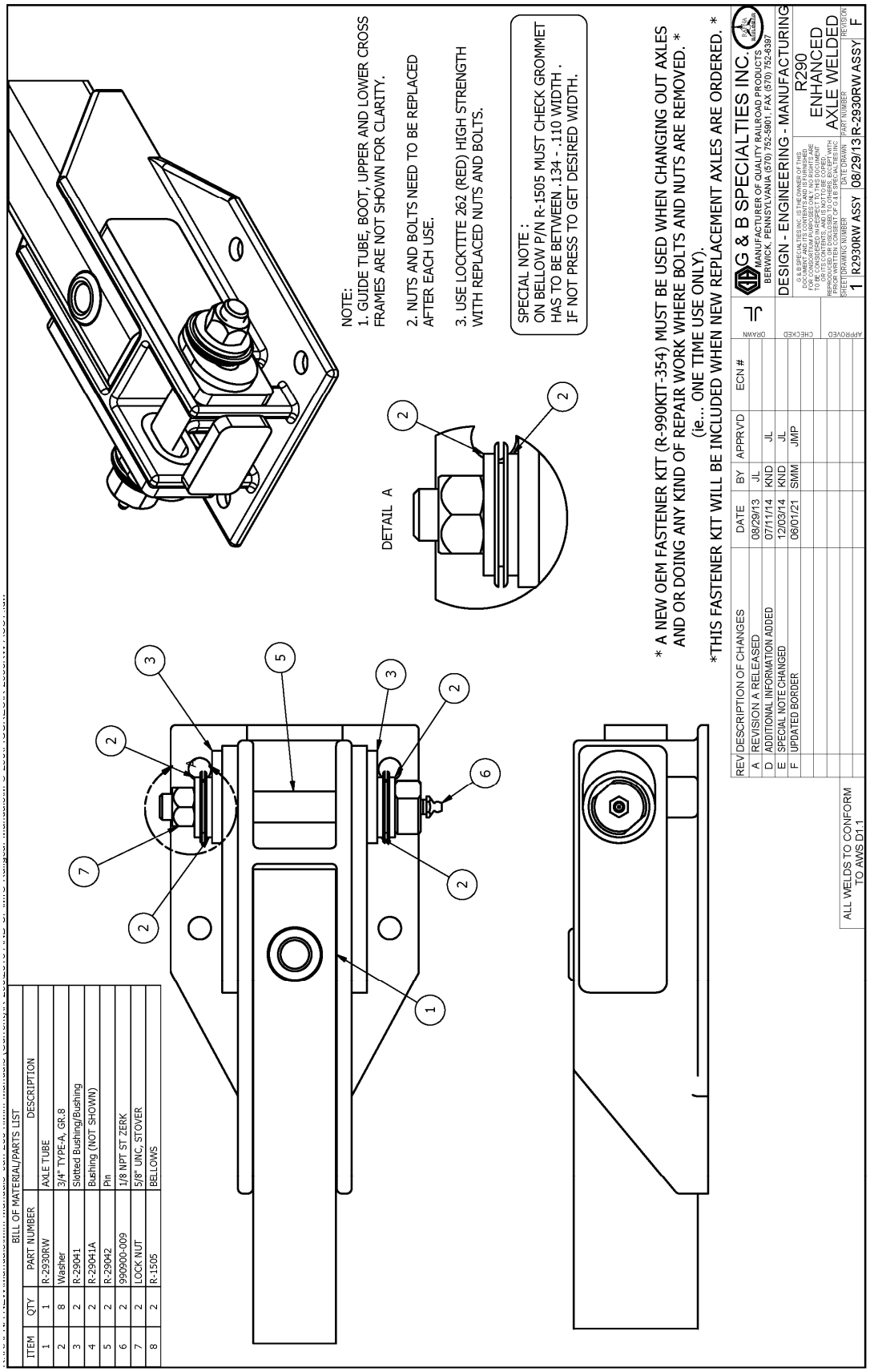
NOTE:
1. GUIDE TUBE, BOOT, UPPER AND LOWER CROSS FRAMES ARE NOT SHOWN FOR CLARITY.
2. NUTS AND BOLTS NEED TO BE REPLACED AFTER EACH USE.
3. USE LOCKTITE 262 (RED) HIGH STRENGTH WITH REPLACED NUTS AND BOLTS.
SPECIAL NOTE :
ON BELLOW P/N R-1505 MUST CHECK GROMMET HAS TO BE BETWEEN .134 - .110 WIDTH .
IF NOT PRESS TO GET DESIRED WIDTH.
DETAIL A
* A NEW OEM FASTENER KIT (R-990KIT-354) MUST BE USED WHEN CHANGING OUT AXLES AND OR DOING ANY KIND OF REPAIR WORK WHERE BOLTS AND NUTS ARE REMOVED. *
(ie... ONE TIME USE ONLY).
*THIS FASTENER KIT WILL BE INCLUDED WHEN NEW REPLACEMENT AXLES ARE ORDERED. *
BILL OF MATERIAL/PARTS LIST
ITEM QTY PART NUMBER DESCRIPTION
1 1 R-2930RW AXLE TUBE
2 8 Washer 3/4" TYPE-A, GR.8
3 2 R-29041 Slotted Bushing/Bushing
4 2 R-29041A Bushing (NOT SHOWN)
5 2 R-29042 Pin
6 2 990900-009 1/8 NPT ST ZERK
7 2 LOCK NUT 5/8" UNC, STOVER
8 2 R-1505 BELLOWS
REV DESCRIPTION OF CHANGES DATE BY APPR'VD ECN #
A REVISION A RELEASED 08/29/13 JL
D ADDITIONAL INFORMATION ADDED 07/11/14 KND JL
E SPECIAL NOTE CHANGED 12/03/14 KND JL
F UPDATED BORDER 06/01/21 SMM JMP
ALL WELDS TO CONFORM TO AWS D1.1
DRAWN
CHECKED
APPROVED
G & B SPECIALTIES INC.
MANUFACTURER OF QUALITY RAILROAD PRODUCTS
BERWICK, PENNSYLVANIA (570) 752-5901, FAX (570) 752-6397
DESIGN - ENGINEERING - MANUFACTURING
R290
ENHANCED
AXLE WELDED
SHEET DRAWING NUMBER
1
DATE DRAWN
08/29/13
PART NUMBER
R-2930RW ASSY
REVISION
F

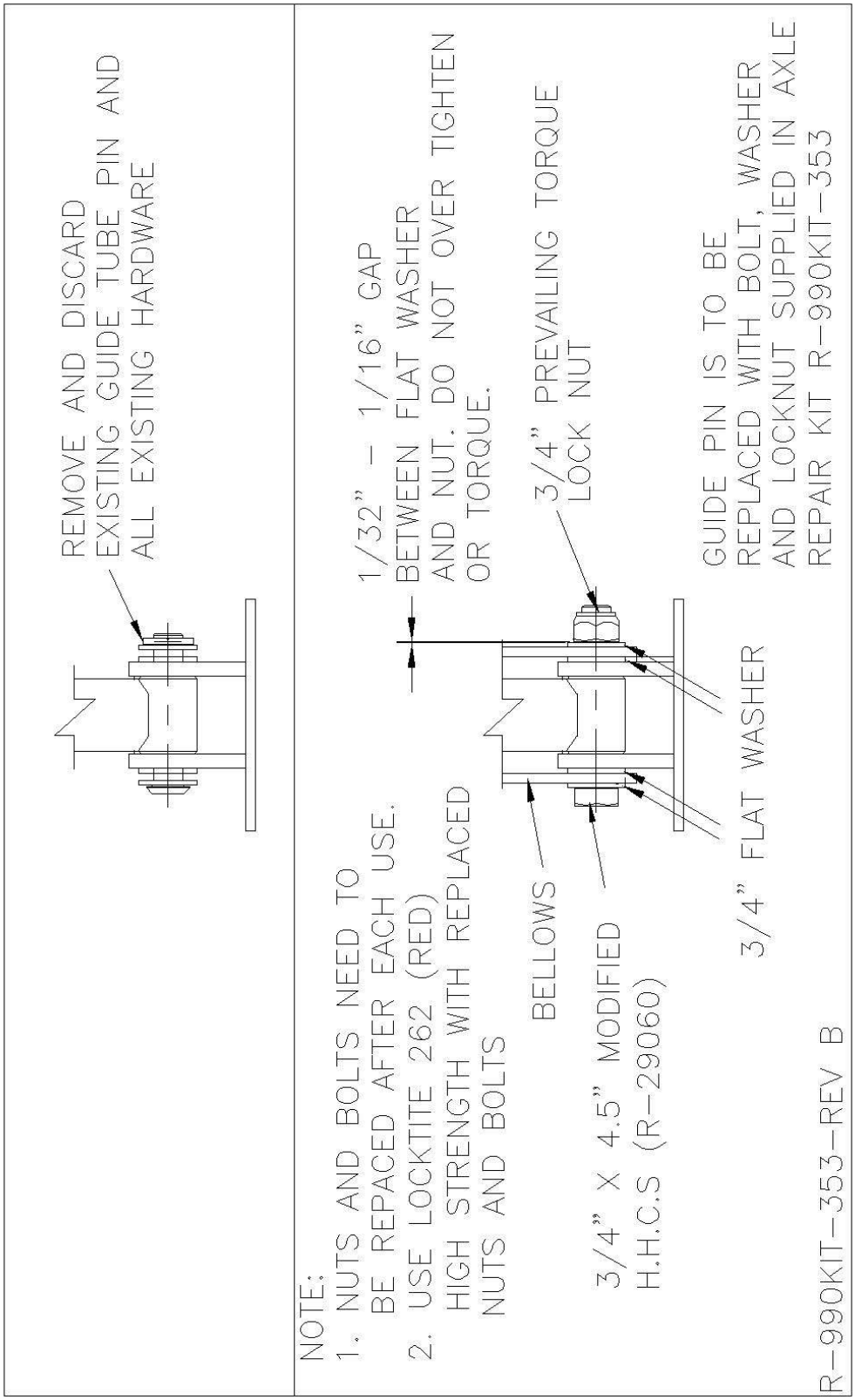

ALTERNATE INSPECTION METHOD

RAILGEAR KITS

The following procedure details the installation of the railgear kit. The procedure is identical for both front and rear applications.

Table 1: Railgear Kit Installation Parts

Part Number	Description	Qty
R-2900A	Railgear Assembly (Standard/In-Cab)	1
R-2900B	Railgear Assembly (Full In-Cab)	
R-2900D	Railgear Assembly (Bronze Bushings)	
R-1600	Rail Wheel Assembly	2
R-21102D	Rail Sweep	1
R-21102P	Rail Sweep	1
R-990KIT-203 (2 per)	1/2” UNC Gr. 8 Bolt x 1 3/4” Long	8 (4)
	1/2” Gr. 8 Washer	16 (8)
	1/2” UNC Gr. 8 Nylon Insert Lock Nut	8 (4)

R-290 All Front/Rear Applications w/ Steel Wheels

Table 2: Railgear Kit Installation Parts

Part Number	Description	Qty
R-2900A	Railgear Assembly (Standard/In-Cab)	1
R-2900B	Railgear Assembly (Full In-Cab)	
R-2900D	Railgear Assembly (Bronze Bushings)	
R-25121	Rail Wheel Assembly - Rubber	2
R-21102D	Rail Sweep	1
R-21102P	Rail Sweep	1
R-990KIT-203 (2 per)	1/2” UNC Gr. 8 Bolt x 1 3/4” Long	8 (4)
	1/2” Gr. 8 Washer	16 (8)
	1/2” UNC Gr. 8 Nylon Insert Lock Nut	8 (4)

R-290 All Front/Rear Applications w/ Rubber Wheels

INSTALLATION OF RAILGEAR KIT

1. Ensure that the respective (front or rear) mounting kit has been installed on the vehicle prior to installing the railgear kit.

2. In order to install the railgear at the correct height, ensure that the road wheels and tires kit has been installed on the vehicle and that the vehicle is resting on its four properly inflated tires.

3. **Standard/In-Cab Controls Only:**

    a. Depending on the Hydraulic Kit ordered, lock cam converters may have been supplied to prevent the lock pins from engaging in the rail position. If this is the case, manually rotate the railgear until the rail position lock cam is accessible. Position the lock cam converter on the rail position lock cam and weld it in place. Grind the cam smooth so that the lock pin slides smoothly past the weld. The lock cam converter should prevent the lock pin from engaging in the rail position.

4. Measure from the railgear mounting surface, the bottom of the mounting brackets, to the ground. Determine what combination of railgear mounting shims are required to set the railgear mounting surface at approximately 17.5 - 18” from the ground. Railgear mounting shims are supplied with the vehicle mounting kit. If this height cannot be achieved with the supplied shims, the vehicle suspension will need to be modified. This modification is not included with the Rafna railgear.

5. Position the railgear beneath the mounting plates on the vehicle. When installed on the front of the vehicle, the hydraulic cylinder should be on the front side of the railgear. When installed on the rear of the vehicle, the hydraulic cylinder should be on the rear side of the railgear.

6. Raise the railgear to the mounting plates using the railgear mounting shims as required between the mounting plates and the railgear. Align the holes in the railgear and shims with the slots in the mounting plates. Center the railgear on the mounting plate slots. If there are multiple slot sets in the mounting plates, try to use the slots that will position the railgear closest to the vehicle wheels. Ensure that the railgear does not contact any vehicle components. Fasten the railgear and shims to the mounting plates using four suitably long ¾” bolts, eight ¾” washers, and four ¾” nuts.

7. Tighten but do not torque the ¾” fasteners as they will be torqued following the railgear alignment procedure.

8. Place the rail wheels below the mounting tables on the railgear axle. Place the rail sweeps in front of (for front railgear applications) or to the rear of (for rear railgear applications) the rail wheels and below the mounting tables. Fasten the rail wheels and rail sweeps to the mounting tables with eight ½” x 2” long bolts, sixteen ½” washers, and eight ½” nuts.

9. Tighten but do not torque the ½” fasteners as they will be torqued following the railgear alignment procedure.

10. Re-install the vehicle bumper and other components as required.

11. Manually rotate the railgear up to the road position. Take note of if and where the railgear, rail wheels, and/or rail sweeps contact the vehicle bumper and or exhaust. Trim and reinforce the bumper as required. Ensure there is enough clearance to accommodate side-to-side adjustment and rail wheel load adjustment of the railgear. The exhaust system can be bent to fit around the railgear. Ensure any exhaust system modifications conform to applicable laws and regulations. Proceed to install the railgear hydraulic system as per the Hydraulic Kit Installation manual before continuing with the following steps.

12. **Standard/In-Cab Controls Only:**

    a. The locking cable is supplied with a bulkhead fitting to ease installation. Ensure that the "Pull To Unlock" placard is on the cable end.

13. Follow the Railgear Over-Center Adjustment procedure detailed in the Railgear Kit Operation, Service and Parts manual. Ensure the cylinder rod-end lock nut is re-tightened following this adjustment.

14. **Standard/In-Cab Controls Only:**

    a. With the railgear fully raised to the road position, ensure that the railgear lock pin properly engages the lock cam. It may be necessary to grind the lock cam slightly to ensure proper fit.

15. **Standard/In-Cab Controls Only:**

    a. Note that some hydraulic kit installations provide a lock cam converter to prevent the railgear lock pin from engaging in the rail position. If such a lock cam converter was installed, skip this step. Otherwise, with the railgear fully lowered to the rail position, ensure that the railgear lock pin properly engages the lock cam. It may be necessary to grind the lock cam slightly to ensure proper fit.

16. Follow the Rail Wheel Load Adjustment procedure detailed in the Railgear Kit Operation, Service and Parts manual.

17. Follow the Railgear Alignment procedure detailed in the Railgear Kit Operation, Service and Parts manual.

18. Follow the Rail Sweep Adjustment procedure detailed in the Railgear Kit Operation, Service and Parts manual.

19. Torque all fasteners as detailed in the Railgear Kit Operation, Service and Parts manual.

20. Grease the railgear at all lubrication points as detailed in the Railgear Kit Operation, Service and Parts manual.

PARTS LIST

ITEM	QTY	PART NUMBER	DESCRIPTION
1	1	R-2900A	RAILGEAR ASSEMBLY
		R-2900B	RAILGEAR ASSEMBLY (FICC)
2	2	R-1600	10" RAIL WHEEL ASSEMBLY
3	1	R-21102D	RAIL SWEEP, DRIVERS SIDE
4	1	R-21102P	RAIL SWEEP, PASSENGERS SIDE
5	8	-	1/2" UNC GR. 8 BOLT X 2" Lg.
6	16	-	1/2" GR. 8 WASHER
7	8	-	1/2" UNC GR. 8 NYLOCK NUT
8	-	-	3/4" MOUNT. HARDWARE (AS NEEDED)
9	-	-	3/4" MOUNT. HARDWARE (AS NEEDED)
10	-	-	3/4" MOUNT. HARDWARE (AS NEEDED)
11	-	-	MOUNTING BRACKET (AS PER MTG KIT)
12	-	-	SHIMS (AS REQUIRED BY MTG KIT)

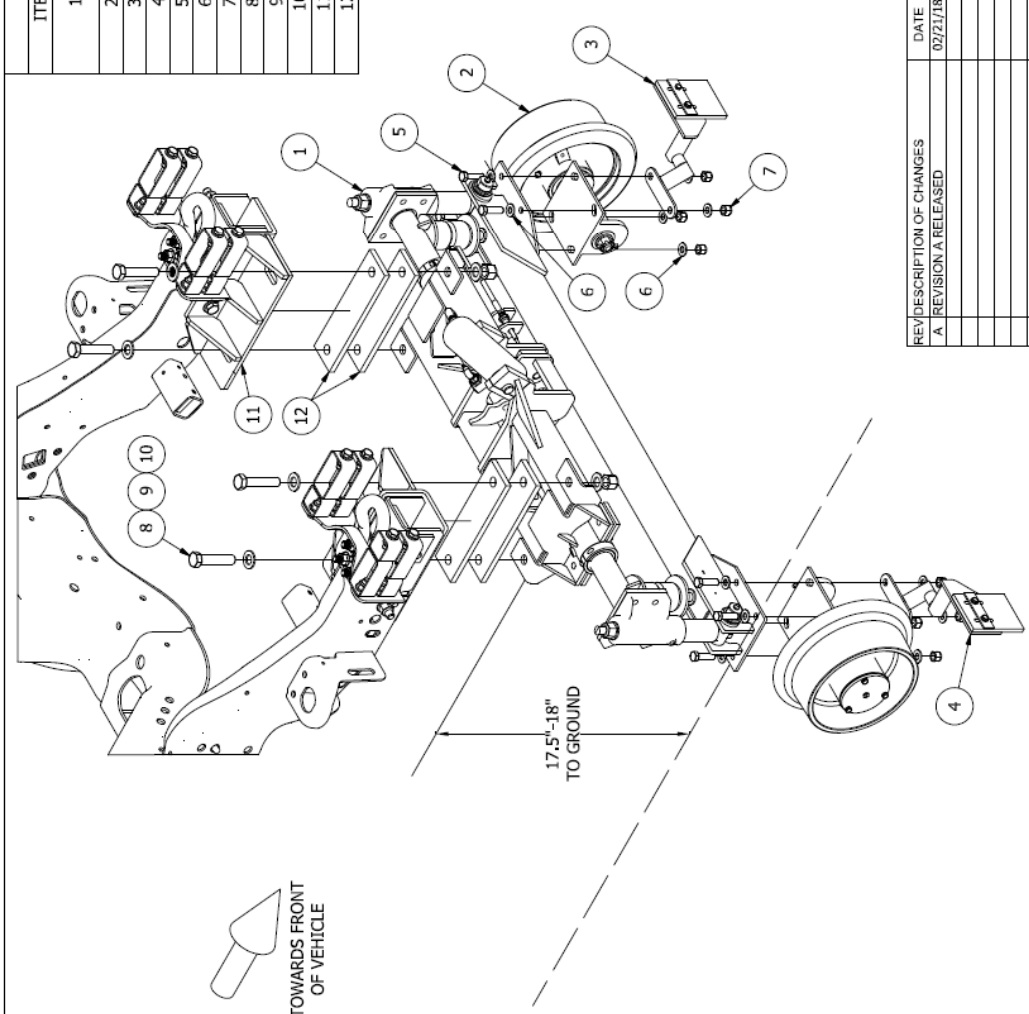

REV	DESCRIPTION OF CHANGES	DATE	BY	APPRV'D	ECN #
A	REVISION A RELEASED	02/21/18	SMM	JMP	

ALL WELDS TO CONFORM TO AWS D1.1

G & B SPECIALTIES INC.
MANUFACTURER OF QUALITY RAILROAD PRODUCTS
BERWICK, PENNSYLVANIA (570) 752-5901, FAX (570) 752-6397

DESIGN - ENGINEERING - MANUFACTURING

G & B SPECIALTIES INC. IS THE OWNER OF THE DOCUMENT AND RETAINS ALL RIGHTS. THIS DOCUMENT IS FURNISHED FOR CONSIDERATION FOR PURCHASE ONLY. NO RIGHTS ARE GIVEN TO REPRODUCE OR DISCLOSE THE DOCUMENT OR ITS CONTENTS. THE DOCUMENT MUST BE RETURNED UPON REQUEST. REPRODUCED OR DISCLOSED TO OTHERS, EXCEPT WITH WRITTEN PERMISSION, IS A VIOLATION OF LAW.

RAILGEAR INSTALLATION KIT FRONT

DRAWN	CHECKED	APPROVED
SMM	JMP	JMP

SHEET	DRAWING NUMBER	DATE DRAWN	PART NUMBER	REVISION
1	KR29RRXR290FD	02/21/18	K-R29RRXR290FD	A

PARTS LIST

ITEM	QTY	PART NUMBER	DESCRIPTION
1	1	R-2900A	RAILGEAR ASSEMBLY
		R-2900B	RAILGEAR ASSEMBLY (FICC)
2	2	R-1600	10" RAIL WHEEL ASSEMBLY
3	1	R-21102D	RAIL SWEEP, DRIVERS SIDE
4	1	R-21102P	RAIL SWEEP, PASSENGERS SIDE
5	8	-	1/2" UNC GR. 8 BOLT X 2" Lg.
6	16	-	1/2" GR. 8 WASHER
7	8	-	1/2" UNC GR. 8 NYLOCK NUT
8	-	-	3/4" MOUNT. HARDWARE (AS NEEDED)
9	-	-	3/4" MOUNT. HARDWARE (AS NEEDED)
10	-	-	3/4" MOUNT. HARDWARE (AS NEEDED)
11	-	-	MOUNTING BRACKET (AS PER MTG KIT)
12	-	-	SHIMS (AS REQUIRED BY MTG KIT)

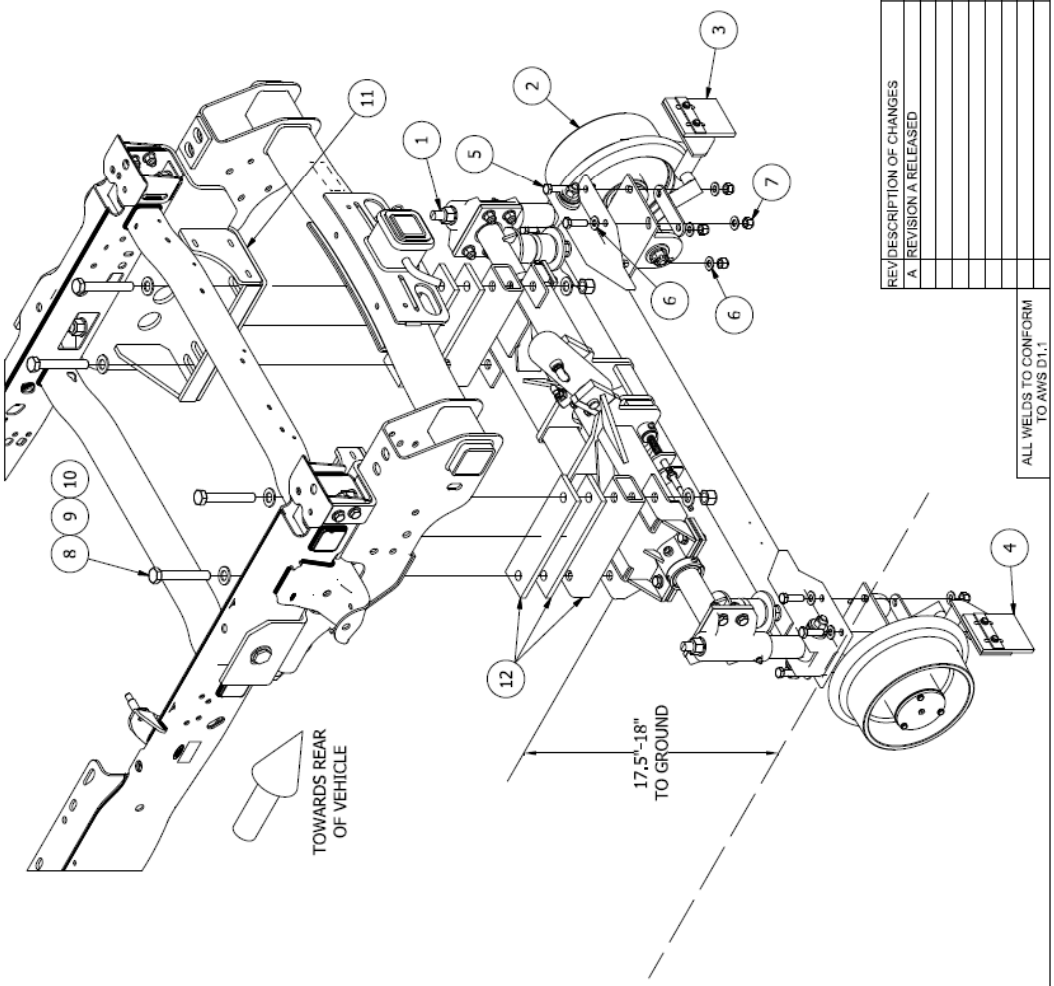

ALL WELDS TO CONFORM TO AWS D1.1

REV	DESCRIPTION OF CHANGES	DATE	BY	APPR'D	ECN #
A	REVISION A RELEASED	02/21/18	SMM	JMP	

DRAWN SMM
CHECKED JMP
APPROVED JMP

G & B SPECIALTIES INC.
MANUFACTURER OF QUALITY RAILROAD PRODUCTS
BERWICK, PENNSYLVANIA (570) 752-5901, FAX (570) 752-6397

DESIGN - ENGINEERING - MANUFACTURING

G & B SPECIALTIES, INC. IS THE OWNER OF THE DOCUMENT AND ITS CONTENTS AND IT HAS THE EXCLUSIVE RIGHT TO USE THE DOCUMENT TO BE CONSIDERED IN RESPECT TO THE DOCUMENT AND ITS CONTENTS. NO PART MAY BE REPRODUCED OR DISCLOSED TO OTHERS, EXCEPT WITH PRIOR WRITTEN CONSENT OF G & B SPECIALTIES, INC.

RAILGEAR INSTALLATION KIT REAR

SHEET	PART NUMBER	REVISION
1	KR29RRXR290FDR	A

DATE	PART NUMBER
02/21/18	KR29RRXR290FDR

EXHAUST MODIFICATION BY VEHICLE

DIESEL EXHAUST MODIFICATION (FORD SD F-250 THRU F-550):

APPLICABLE INSTALLATIONS:

R-290 RAILGEAR INSTALLED ON 2008 ~ 2010 FORD F250/F350/F450/F550, *DIESEL* ENGINES.
R-290 RAILGEAR INSTALLED ON 2011 FORD F250/F350/F450/F550, *DIESEL* ENGINES.

RECOMMENDATIONS:

ANY ALTERATIONS TO THE EXHAUST SYSTEM OF 2008 ~ 2010, FORD SUPER DUTY F-SERIES, MUST FOLLOW THE GUIDELINES OF FORD DOCUMENT BBB0734-2007.

ANY ALTERATIONS TO THE EXHAUST SYSTEM OF 2011, FORD SUPER DUTY F-SERIES, MUST FOLLOW THE GUIDELINES OF FORD DOCUMENT Q-187.

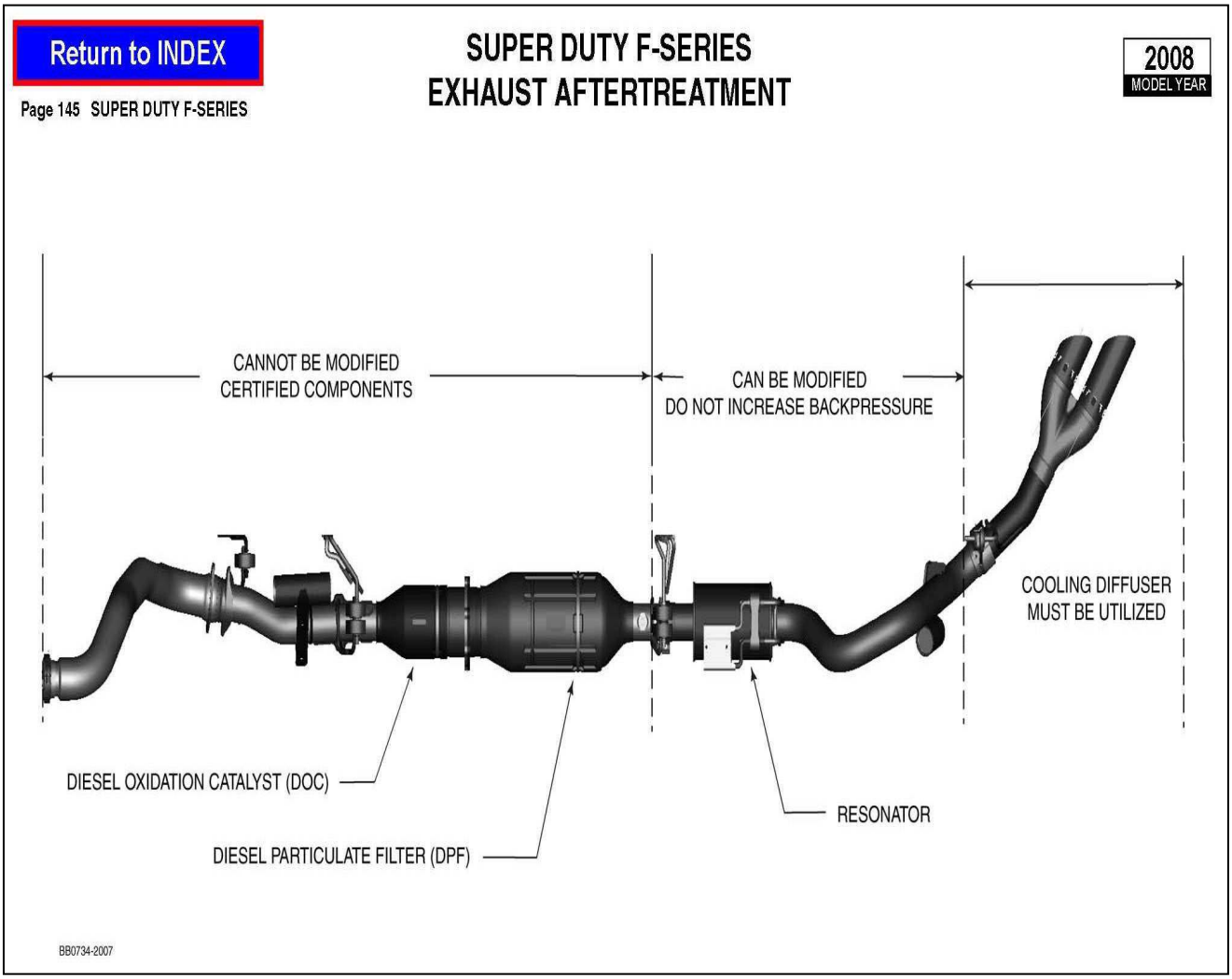

Q-187

QUALIFIED VEHICLE MODIFIER

SVE BULLETIN

SPECIAL VEHICLE ENGINEERING – BODY BUILDERS ADVISORY SERVICE

E-Mail via website: www.fleet.ford.com/truckbbas (click "Contact Us")

Toll-free: (877) 840-4338

QVM Bulletin: Q-187 Date: June 01, 2010

2011 MY F-Series Super Duty 6.7L Exhaust System Modifications

The requirement applies to:
2011 model year F-Series Super Duty Pickup (F-250/350) and Chassis Cab (F-350/450/550), with a 6.7L V8 diesel engine.

6.7L Diesel engine Exhaust Modifications

Modifications to the exhaust system to accommodate service body installation and other applications may be made as shown:

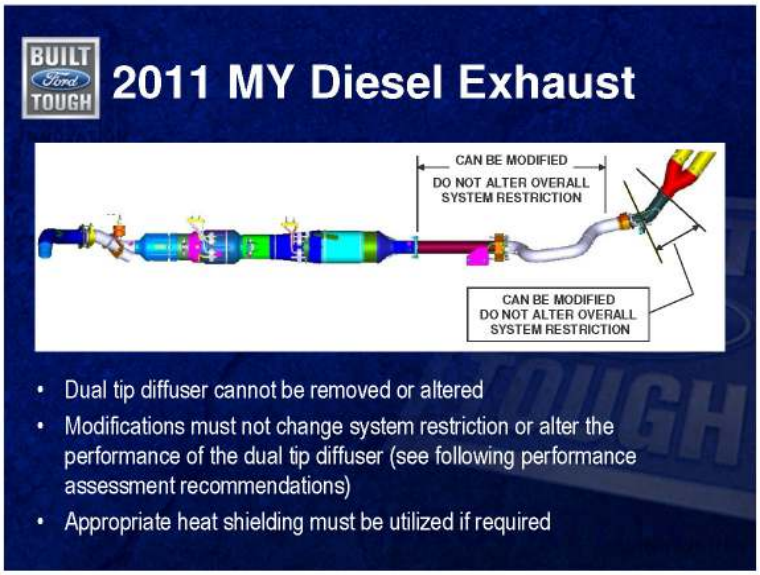

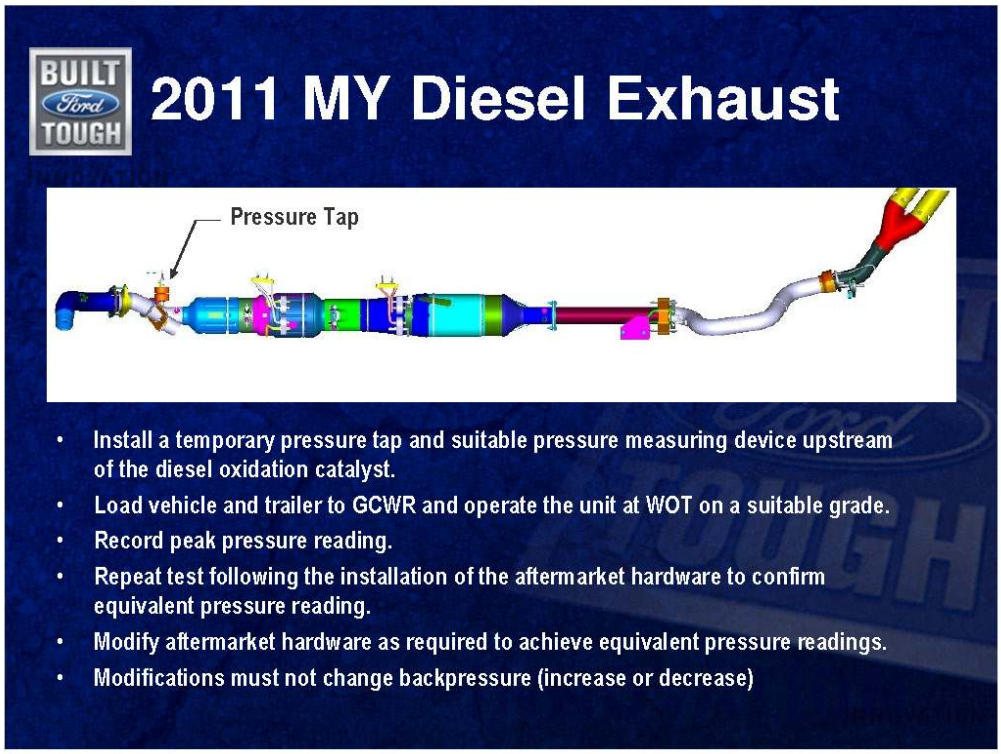
BUILT Ford TOUGH
2011 MY Diesel Exhaust
Pressure Tap
• Install a temporary pressure tap and suitable pressure measuring device upstream of the diesel oxidation catalyst.
• Load vehicle and trailer to GCWR and operate the unit at WOT on a suitable grade.
• Record peak pressure reading.
• Repeat test following the installation of the aftermarket hardware to confirm equivalent pressure reading.
• Modify aftermarket hardware as required to achieve equivalent pressure readings.
• Modifications must not change backpressure (increase or decrease)

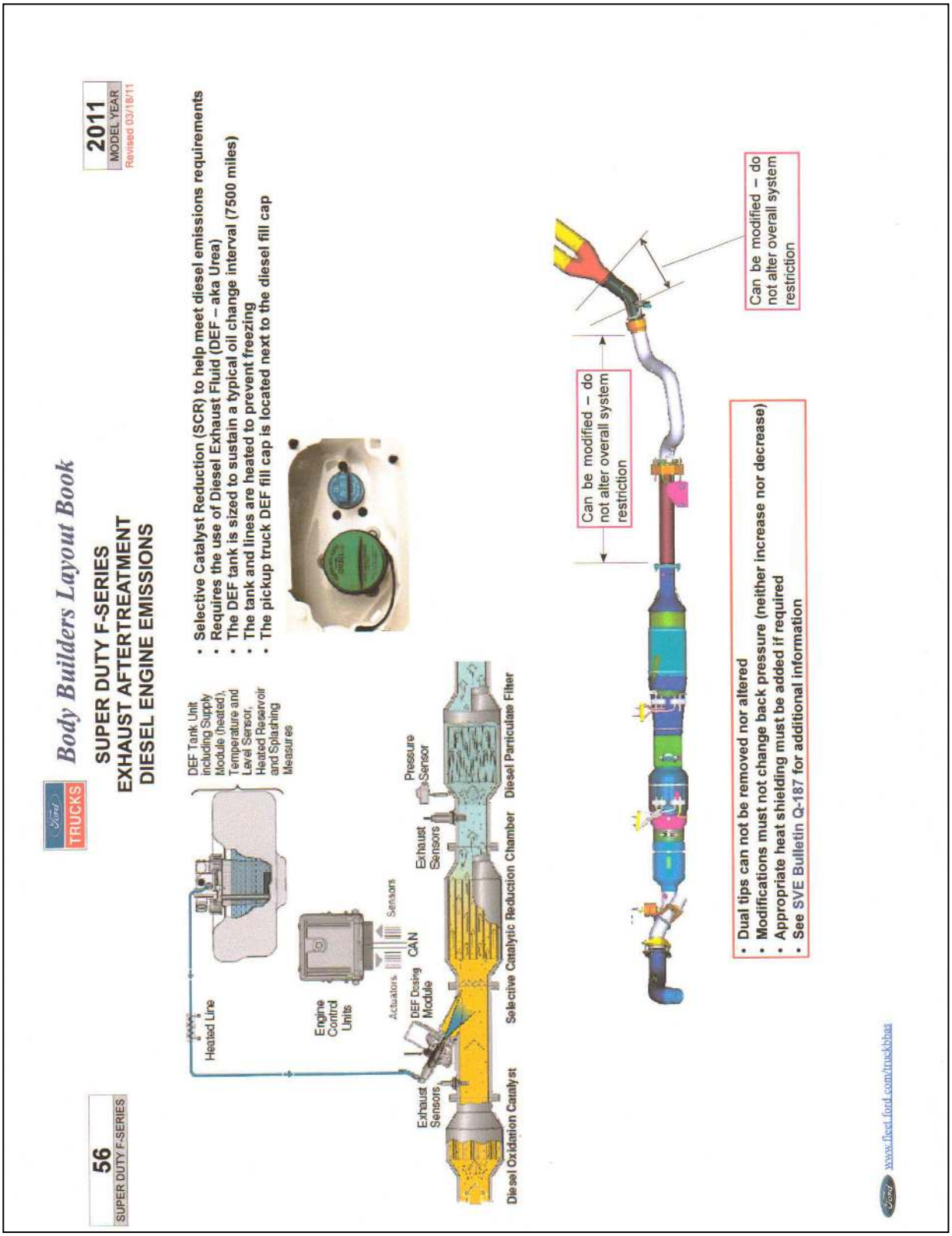
Ford TRUCKS
Body Builders Layout Book
2011 MODEL YEAR
Revised 03/18/11
SUPER DUTY F-SERIES
EXHAUST AFTERTREATMENT
DIESEL ENGINE EMISSIONS
• Selective Catalyst Reduction (SCR) to help meet diesel emissions requirements
• Requires the use of Diesel Exhaust Fluid (DEF – aka Urea)
• The DEF tank is sized to sustain a typical oil change interval (7500 miles)
• The tank and lines are heated to prevent freezing
• The pickup truck DEF fill cap is located next to the diesel fill cap
DEF Tank Unit including Supply Module (heated), Temperature and Level Sensor, Heated Reservoir and Splashing Measures
Heated Line
Engine Control Units
Sensors
Actuators
CAN
DEF Dosing Module
Exhaust Sensors
Pressure Sensor
Exhaust Sensors
Diesel Oxidation Catalyst
Selective Catalytic Reduction Chamber
Diesel Particulate Filter
Can be modified – do not alter overall system restriction
Can be modified – do not alter overall system restriction
• Dual tips can not be removed nor altered
• Modifications must not change back pressure (neither increase nor decrease)
• Appropriate heat shielding must be added if required
• See SVE Bulletin Q-187 for additional information
56
SUPER DUTY F-SERIES
www.fleet.ford.com/truckbbas

DIESEL EXHAUST MODIFICATION (2017 FORD SD F-250 THRU F-450 AND CHASSIS CAB):

APPLICABLE INSTALLATIONS:

R-290 RAILGEAR INSTALLED ON 2017 ~ CURRENT FORD F250/F350/F450/CHASSIS CAB, 6.7L *DIESEL* ENGINES.

RECOMMENDATIONS:

ANY ALTERATIONS TO THE EXHAUST SYSTEM OF 2017 ~ PRESENT, FORD SUPER DUTY F-SERIES, MUST FOLLOW THE GUIDELINES OF THE FORD DOCUMENT BELOW.

ANY ALTERATIONS TO THE EXHAUST SYSTEM OF 2017 ~ PRESENT, FORD SUPER DUTY F-SERIES, MUST FOLLOW THE GUIDELINES OF FORD DOCUMENT Q-235.

Q-253

QUALIFIED VEHICLE MODIFIER

SVE BULLETIN

SPECIAL VEHICLE ENGINEERING – BODY BUILDERS ADVISORY SERVICE

E-Mail via Website: www.fleet.ford.com/truckbbas (click "Contact Us")

Toll-free: (877) 840-4338

QVM Bulletin: Q-253 Date: 09 August, 2016

2017 MY F-Series Super Duty 6.7L Exhaust System Modifications

Models Affected: 2017 MY to present F-Series Super Duty Pickup (F-250/350/450) and Chassis Cab with 6.7L diesel engine.

Description: Modifications to the exhaust system, when required to accommodate service body installations, may be made as shown:

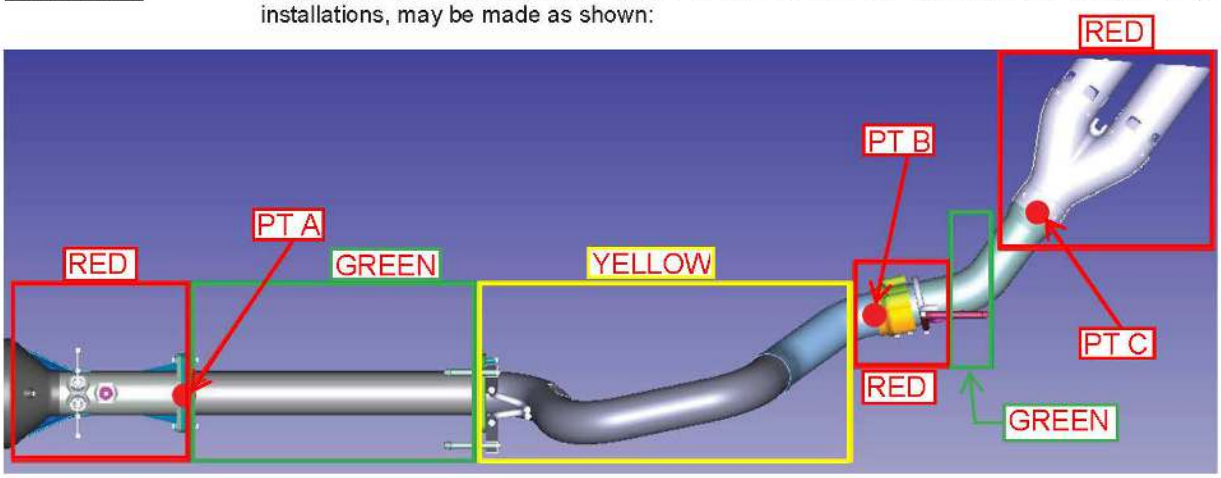

RED: Areas that CANNOT be modified due to durability or functional requirements.

YELLOW: Areas that are NOT RECOMMENDED for modification due to critical clearances to rear axle motion envelope.

GREEN: Areas that are allowed to be modified.

PT A - PT B: Any modifications between Pts A – B must not shorten the centerline length between the two points to a length less than that of the shortest wheelbase. MIN Centerline Length = 1160 mm for reference.
PT B – PT C: Any modifications between Pts B – C must not shorten the centerline length between the two points and should be made using pipe diameter equivalent to the OEM assembly. MIN Centerline Length = 400 mm for reference.

Additional information:

- Dual tip diffuser cannot be removed or altered.
- Modifications must not change system restriction or alter the performance of the dual tip diffuser (see following performance assessment recommendations).
- Appropriate heat shielding must be utilized if required.

G&B Specialties Inc. 535 West 3rd Street, Berwick, PA, USA Tel: **(570) 752-5901** Fax: **(570) 752-6397** US Field Service: **570-441-6988**; CAN Field Service **570-854-0482**; **www.rafna.com**

Performance Assessment Recommendations:

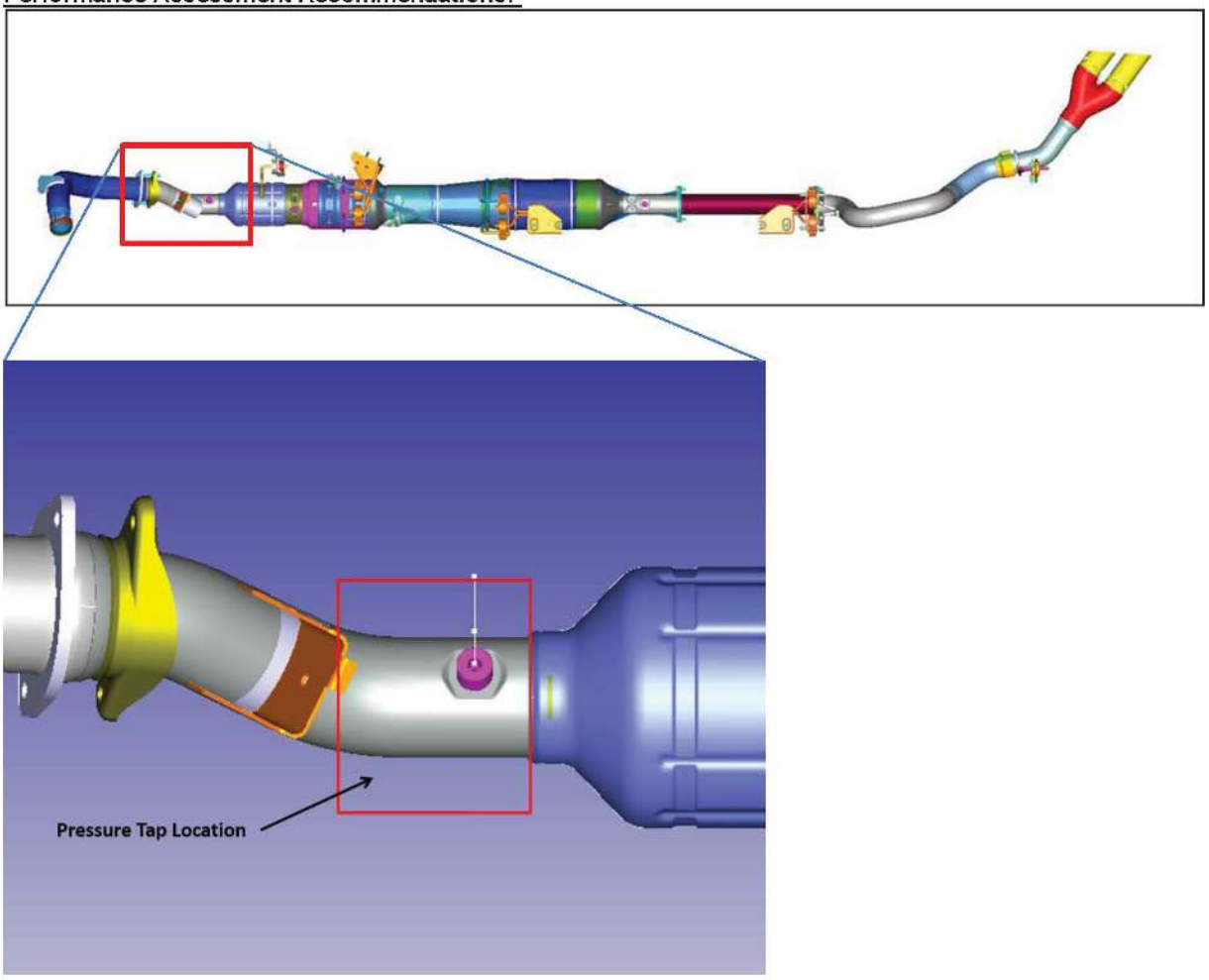

- Install a temporary pressure tap and suitable pressure measuring device upstream of the diesel oxidation catalyst
- Load vehicle and trailer to GVWR and operate the unit at WOT on a suitable grade.
- Record peak pressure reading.
- Repeat test following installation of aftermarket hardware to confirm equivalent pressure reading.
- Modify aftermarket hardware as required to achieve equivalent pressure readings.
- Modifications must not change backpressure (increase or decrease).

G&B Specialties Inc. 535 West 3rd Street, Berwick, PA, USA Tel: **(570) 752-5901** Fax: **(570) 752-6397** US Field Service: **570-441-6988**; CAN Field Service **570-854-0482**; **www.rafna.com**

DIESEL EXHAUST MODIFICATION (GM 2500/3500):

APPLICABLE INSTALLATIONS:

R-290 RAILGEAR INSTALLED ON 2007 ~ CURRENT MY, POST-EMISSION DIESEL ENGINE

RECOMMENDATIONS:

ANY ALTERATIONS TO THE EXHAUST SYSTEM OF GMC/CHEVY, 2500/3500 CK PICKUPS, MUST FOLLOW THE GUIDELINES OF (C/K 207 (43/53) W/LMM-EXHAUST SYSTEMS, #ANB44495.19), AND (GENERAL INSTRUCTIONS)

FULL SIZE C/K HD PICKUPS AND CHASSIS-CABS

PAGE 83

C/K 207 (43/53) w/LMM – Exhaust Systems

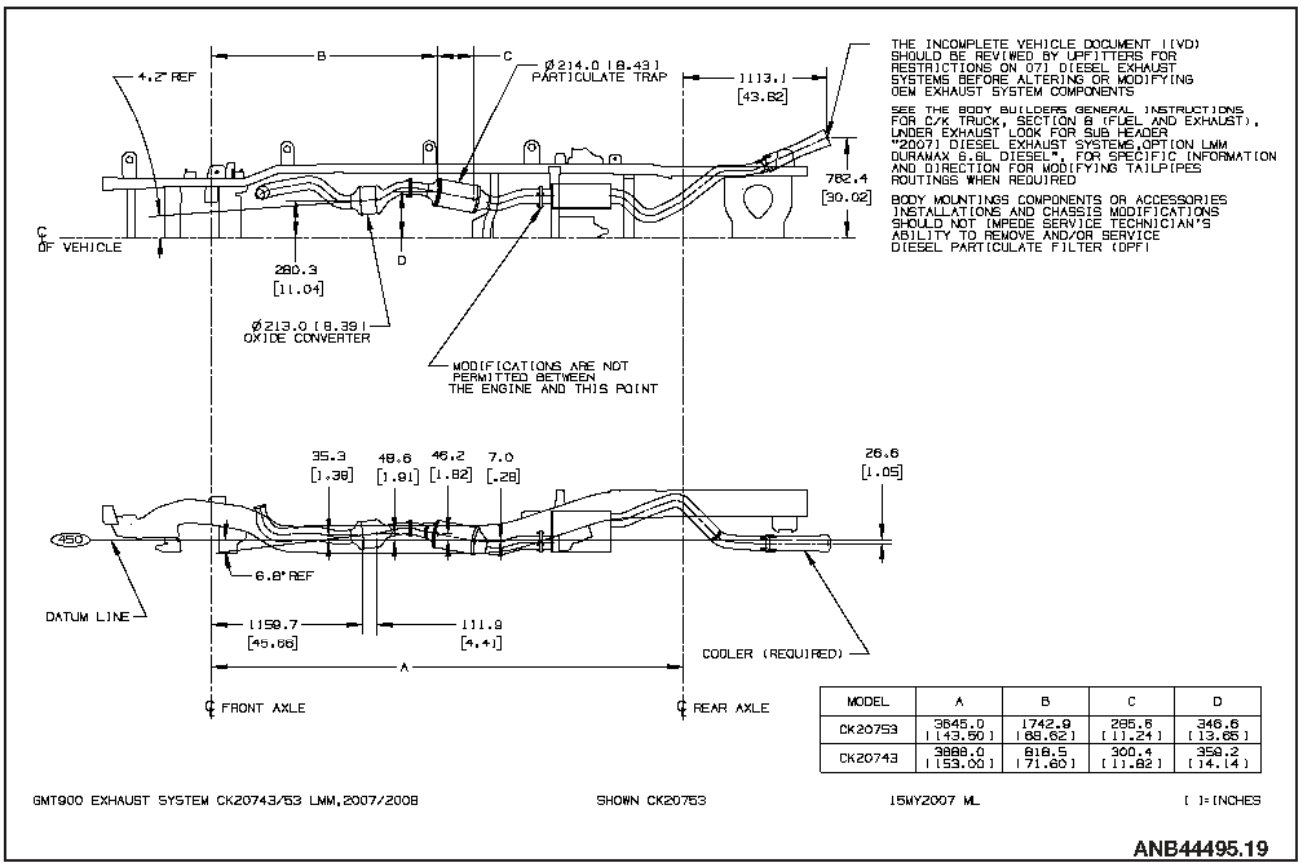

MODEL	A	B	C	D
CK20753	3645.0 [143.50]	1742.9 [68.62]	285.6 [11.24]	346.6 [13.65]
CK20743	3888.0 [153.00]	818.5 [71.60]	300.4 [11.82]	359.2 [14.14]

Full Size C/K HD Pickups and Chassis-Cab – 2007 Rev. 6-07

GENERAL INSTRUCTIONS – NEW FULL SIZE C/K PICKUPS & CHASSIS-CABS

(Section 8 — continued from previous page)

Exhaust System

Particular care should be taken to prevent the possibility of exhaust fumes and carbon monoxide exposure to vehicle occupants in units completed by body builders. Holes and openings through the floor and all other parts of the body must be permanently and adequately sealed by the body builder to avoid exhaust intrusion into any occupant area. If it is necessary to change the exhaust outlet location, the exhaust discharge must be unobstructed and directed away from occupant areas. Alteration of the exhaust outlet or its position may increase exhaust noise and render the vehicle illegal in those areas with pass-by noise regulations. All vehicles >10,000 lbs. GVWR come under Federal noise regulations, vehicles ≤10,000 lbs. GVWR are regulated by various state and local regulations of the Environmental Protection Agency; see those regulations for rules, test procedure and noise levels permitted.

Tail pipe outlet location must be tested statically and with the vehicle in motion to ensure that exhaust gases do not penetrate side or rear windows or under body seams and holes. Auxiliary power plants should also be tested under the same conditions. Tail pipe exit ahead of rear wheels is not recommended.

Check for leaks in exhaust systems and repair as required.

Exhaust temperatures can exceed 1600°F under extreme operating conditions, with pipe surface temperatures slightly less than this. Extreme care must be used when placing body components in the proximity of the exhaust system so as not to exceed the rated temperature limits of the components. Due to variants in underbody configurations of the vehicles, we are not in a position to make recommendations on how to insulate or design components in the proximity of the exhaust system.

Each manufacturer must make temperature checks of critical areas of his vehicle and adjust his design accordingly, or provide shielding to ensure safe operation of his body components.

The same can be said for the engine compartment. Obviously there will be additional heat radiated from the engine. How much is retained in the area will depend on how well this area is ventilated in your individual designs. Here again, temperature checks of interior areas surrounding the engine should be made to determine if your insulation is adequate. This is the same engineering practice we have followed on our complete vehicles incorporating these exhaust systems.

Exhaust system materials are selected and tested to withstand the operating environment of the vehicle. ***Do not modify the exhaust system in any way.*** The tail pipes are made of 409 stainless steel.

Heat shields are mounted to the underbody and/or exhaust system components (catalytic converter and muffler). Shields for the propshaft hanger bearings are also provided in some vehicles.

GENERAL INSTRUCTIONS – NEW FULL SIZE C/K PICKUPS & CHASSIS-CABS

(Section 8 — continued from previous page)

2007I Diesel Exhaust Systems, option LMM, Duramax 6.6L Diesel

With the exception of the tailpipe, do not modify the exhaust system in any way.

Exhaust system materials are selected and tested to withstand the operating environment of the vehicle. Tailpipes are made of 4 inch outer diameter 409 aluminized stainless steel w 1.8 mm wall thickness; modifications should have the same construction.

The exhaust gas temperature exiting the diesel particulate filter may be as high as 1200° F. The exhaust system is provided with a cooler on the tailpipe to reduce the exit gas temperature. If it is necessary to change the tailpipe outlet location, the exhaust cooler must be re-attached to the tailpipe after the final location is determined.

Alteration of the exhaust outlet or its position may increase exhaust noise and render the vehicle illegal in those areas with pass-by noise regulations. All vehicles >10,000 lbs GVWR come under Federal noise regulations of the Environmental Protection Agency; see those regulations for rules, test procedures, and permitted noise levels.

Care should be taken to prevent the possibility of exhaust gas / carbon monoxide exposure to vehicle occupants in 2nd units added by body builders. Holes and openings through the floor and all other parts of the body must be permanently and adequately sealed by the body builder to avoid exhaust gas intrusion into any occupant area. Exhaust discharge must be unobstructed and directed away from occupant areas. The tailpipe outlet location must be tested statically and with the vehicle in motion to ensure that exhaust gas does not penetrate side or rear windows or underbody seams and holes. Auxiliary power plants should also be tested under the same conditions. The tailpipe outlet must extend 2.0 to 2.5 in. outboard of the 2nd unit side panels. Positioning of the tailpipe exit ahead of the rear wheels is not recommended. If tailpipe modifications are necessary, check for leaks in the exhaust system and repair as required.

Exhaust temperatures can exceed 1600° F under extreme operating conditions, with pipe surface temperatures slightly less than this. Extreme care must be used when placing body components in the proximity of the exhaust system so as not to exceed the rated temperature limits of the components. Due to variants in underbody configurations of the installed 2nd units , we are not in a position to make recommendations on how to insulate or design components in the proximity of the exhaust system. Each manufacturer must make temperature checks of critical areas of his 2nd unit and adjust his design accordingly, or provide shielding to ensure safe operation of his 2nd unit components. For those portions of the vehicle provided by General Motors, heat shields are mounted to the underbody and/or exhaust system components to manage the exhaust temperatures.

THIS PAGE INTENTIONALLY LEFT BLANK

FRONT AND REAR RAILGEAR KIT OPERATION

OPERATION SAFETY PRECAUTIONS

<u>If any operating, services or parts problems are encountered, please call G&B Specialties, Inc. for technical assistance.</u>

CAUTION
WARNING

- Failure to heed to any of the following warnings could result in severe bodily injury and/or equipment damage.
- Read and understand this manual completely before attempting operation of the railgear equipped vehicle.
- Operating instructions provided below only address the RAFNA railgear equipment. Applicable railway company procedures and policies must be adhered to.
- Railway company rules governing rail travel must be observed at all times.
- Ensure that the position and function of all railgear controls are known before attempting operation.
- Ensure the railgear is locked in road or rail position before starting road or rail travel respectively.
- Ensure all body parts and loose clothing are clear of any moving parts of the equipment.
- If misalignment of the railgear equipment is indicated, promptly perform the alignment procedure.
- Before performing any work under the vehicle or railgear, ensure the engine is turned off and the parking brake is set.
- Never operate the vehicle if the Gross Vehicle Weight Rating (GVWR), Gross Axle Weight Rating Front or Rear (GAWR), or the wheel or tire load ratings are exceeded.

OPERATION OF RAILGEAR KIT (STANDARD/IN-CAB CONTROLS)

With the railgear kit installed on this vehicle, it may be operated as normal, however the vehicle has decreased ground clearance and angles of approach and departure due to the railgear. Caution must be used when operating the vehicle.

Never operate the vehicle if the Gross Vehicle Weight Rating (GVWR), Gross Axle Weight Rating Front or Rear (GAWR), or the wheel or tire load ratings are exceeded.

Refer to the Hydraulic Kit Operation, Service, and Parts manual for information on the location and operation of the railgear hydraulic system controls.

Placing The Vehicle On Rail – To Lower The Railgear:

1. Disengage the lock pin by pulling on the locking cable handle. If the lock pin cannot be disengaged, raise the railgear slightly.

2. Hold the locking cable handle in the disengaged position.

3. Lower the railgear and release the locking cable handle once the railgear has rotated past the road locked position.

4. As the railgear is being deployed, it will start taking some of the vehicle's load. (If this is not the case, **DO NOT use the railgear**. Inspect the railgear for lubrication and damage.)

5. Continue lowering the railgear until the hydraulic cylinder is fully extended and the lock pin re-engages in the rail position. Some railgear models have a lock cam converter installed to prevent the lock pin from engaging in the rail position; they have a hydraulic lock instead.

6. Ensure that the railgear is fully deployed and about 2°- 3° over-center before proceeding.

Removing The Vehicle From Rail – To Raise The Railgear:

1. Disengage the lock pin by pulling on the locking cable handle. If the lock pin cannot be disengaged, lower the railgear slightly. Some railgear models have a lock cam converter installed to prevent the lock pin from engaging in the rail position in which case the lock pin does not need to be disengaged.

2. Raise the railgear and release the locking cable handle once the railgear has rotated past the rail locked position.

3. Continue raising the railgear until the lock pin clicks into the road locked position. The hydraulic cylinder should be completely retracted.

OPERATION OF RAILGEAR KIT (FULL IN-CAB CONTROLS)

With the railgear kit installed on this vehicle, it may be operated as normal, however the vehicle has decreased ground clearance and angles of approach and departure due to the railgear. Caution must be used when operating the vehicle.

Never operate the vehicle if the Gross Vehicle Weight Rating (GVWR), Gross Axle Weight Rating Front or Rear (GAWR), or the wheel or tire load ratings are exceeded.

Refer to the Hydraulic Kit Operation, Service, and Parts manual for information on the location and operation of the railgear hydraulic system controls.

Placing The Vehicle On Rail – To Lower The Railgear:

1. Prior to approaching the rail crossing, remove the manual safety lock pins from the front and rear railgear. It may be necessary to raise the railgear off the lock pins. Store the lock pins in secure place in the vehicle.

2. Lower the railgear.

3. As the railgear is being deployed, it will start taking some of the vehicle's load. (If this is not the case, **DO NOT use the railgear**. Inspect the railgear for lubrication and damage.)

4. Continue lowering the railgear until the hydraulic cylinder is fully extended.

5. Ensure that the railgear is fully deployed and about 2°- 3° over-center before proceeding.

Removing The Vehicle From Rail – To Raise The Railgear:

1. Raise the railgear.

2. Continue raising the railgear until the hydraulic cylinder is completely retracted.

3. Once the vehicle is clear of the rails, insert the manual safety lock pin through the lock guides.

SERVICE OF RAILGEAR KIT

The railgear kit must be serviced regularly to avoid damage to the equipment. Table 1 below provides the Recommended Service Schedule and the detailed service procedures follow.

Non-standard fastener torque values relative to this railgear are shown in Figure 1. Table 2 provides all other Standard Fastener Torque Values.

Grease fittings are provided at all railgear lubrication points as shown in Figure 2. The recommended lubricant for all lubrication points on this railgear is MYSTIK JT-6 LOW TEMP grease or equivalent. In cold weather areas/seasons, SHELL DARINA XL102 or equivalent may be used.

Table 1: Recommended Service Schedule

Service Required	Daily	Weekly	Monthly	3 Months	6 Months	12 months
Visually inspect the railgear for damaged or worn parts	✓	✓	✓	✓	✓	
Check for loose rail wheels and fasteners (re-torque if required)	✓	✓	✓	✓	✓	
Ensure railgear lock pin is functioning correctly	✓	✓	✓	✓	✓	
Ensure the vehicle is in good operating condition	✓	✓	✓	✓	✓	
Inspect the rail wheel flanges for wear (use Rafna wear gauge)				✓	✓	
Inspect all hydraulic components for leaks or wear	✓	✓	✓	✓	✓	
Check and adjust rail sweeps			✓	✓	✓	
Grease railgear inner and outer guide tubes		✓	✓	✓	✓	
Grease railgear inner tube lower pivot point			✓	✓	✓	
Grease railgear locking pin			✓	✓	✓	
Check and adjust rail wheel bearing end-play			✓	✓	✓	
Grease rail wheel bearings (every 3000 rail kms or 1900 rail miles)				✓	✓	✓
Check and adjust rail wheel load						✓
Check and adjust rail wheel alignment						✓
Check and repack rail wheel bearings						✓

Table 2: Standard Fastener Torque Values

Fastener Size	Fastener Torque Value (ft-lbs) Dry
1” UNC Gr. 8 Fasteners	250
¾” UNC Gr. 8 Fasteners	175
$^{5}/_{8}$” UNC Gr. 8 Fasteners	150
½” UNC Gr. 8 Fasteners	100
$^{3}/_{8}$” UNC Gr. 8 Fasteners	40
¼” UNC Gr. 8 Fasteners	12

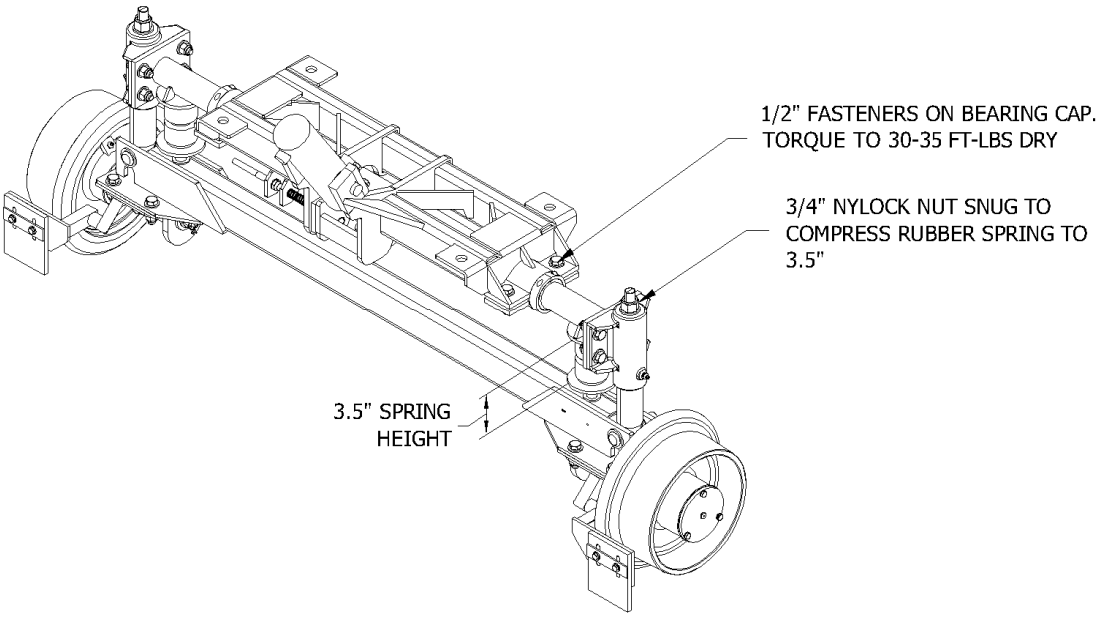

Figure 1: Non-Standard Fastener Torque Values

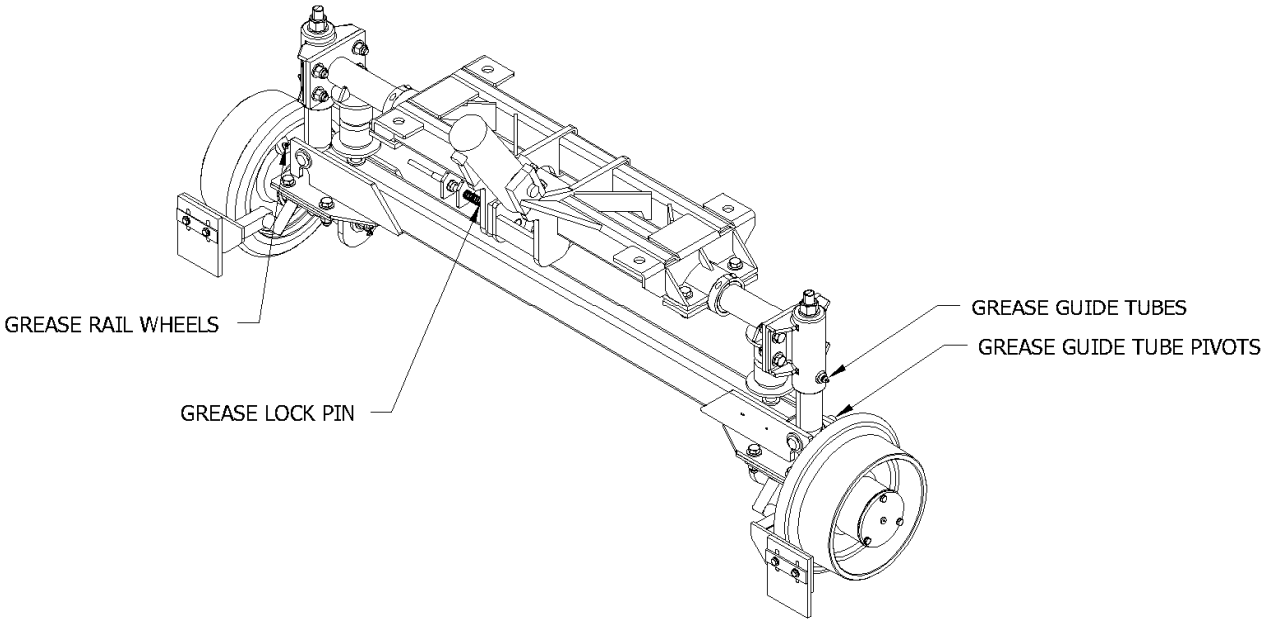

Figure 2: Lubrication Points

RAILGEAR OVER-CENTER ADJUSTMENT

The railgear is designed to rotate slightly past vertical into the rail position in order to provide a secondary safety feature in the event of a hydraulic and / or lock pin failure. With this additional rotation, the railgear would have to lift the vehicle before it could rotate out of the rail position. This additional rotation past vertical is called the over-center angle and is adjustable via a threaded rod end on the end of the hydraulic cylinder. The location of the railgear in the road position is also a function of the over-center adjustment, however, DO NOT use the over-center adjustment to adjust the road position of the railgear. This will have adverse effects on the over-center safety feature.

The over-center angle is defined as the angle between the vertical edge of the outer guide tubes and the vertical. It can be measured with the vehicle on a level section of rail with the railgear in the rail position using an angle meter. The over-center angle must be 2-3° past vertical. If this is not the case, adjust as follows:

1. Unload the railgear hydraulic cylinder by raising the railgear just off rail.

2. Loosen the ¾" jam nut on the hydraulic cylinder rod end and adjust the rod end out to increase the over-center angle or in to decrease the over-center angle. Note that the cylinder rod can be turned instead of turning the rod end.

3. Re-deploy the railgear to the rail position and re-check the over-center angle. Re-adjust as necessary.

4. Tighten the jam nut on the hydraulic cylinder rod end.

5. Following the over-center angle adjustment, the railgear may contact the vehicle if not enough clearance was left during installation. Check the railgear clearance to all vehicle components throughout the full range of railgear and railgear suspension movement. If there is interference with the vehicle bumper, it can be trimmed and reinforced as required. If there is interference with the vehicle exhaust system, it can be bent to fit, ensuring any exhaust system modifications conform to applicable laws and regulations.

6. With the railgear fully raised to the road position, ensure that the railgear lock pin properly engages the lock cam. It may be necessary to grind the lock cam slightly to ensure proper fit.

7. Note that some hydraulic kit installations provide a lock cam converter to prevent the railgear lock pin from engaging in the rail position. If such a lock cam converter was installed, skip this step. Otherwise, with the railgear fully lowered to the rail position, ensure that the railgear lock pin properly engages the lock cam. It may be necessary to grind the lock cam slightly to ensure proper fit.

RAIL WHEEL BEARING ADJUSTMENT

The rail wheel bearings require periodic adjustment in order to keep the end-play within specification. If the rail wheel bearings are not correctly adjusted, failure may occur and will not be covered under the railgear warranty. Check and adjust the bearing end-play with the railgear in the road position and with the rail wheels free to turn.

Use a magnetic base dial gauge to measure the end-play of each rail wheel bearing. The bearing end-play must be between 0.001" and 0.005". If this is not the case, adjust as follows:

1. Remove the rail wheel hubcap and gasket by removing the three ¼" bolts and ¼" lock washers. Remove and discard the cotter pin from the ¾" slotted spindle nut.

2. Ensure the wheel bearing cavity is full of grease.

3. While rotating the rail wheel forward, torque the spindle nut to 20 ft-lbs. Then loosen the spindle nut and re-torque it to 6 ft-lbs. Re-Check and re-adjust the bearing end-play if required. If no torque wrench is available, tighten the spindle nut until the rail wheel is difficult to turn by hand. Then loosen the spindle nut and retighten it just until no loose can be felt in the bearings. Re-adjust the bearing end-play with a torque wrench as soon as possible.

4. Install a new $^{3}/_{16}$" x 2" long cotter pin through the spindle nut. Tighten the spindle nut slightly if needed to insert the cotter pin.

5. Re-install the hubcap and gasket using the ¼" bolts and new ¼" split lock washers. Blue Loctite can be used on the bolts as an added safety measure. Tighten and torque the ¼" fasteners to 12 ft-lbs dry. Do not over torque.

RAIL SWEEP ADJUSTMENT

The distance between the rail sweep rubber and the rail is adjustable and should be maintained at approximately $^{1}/_{8}$". To adjust the rail sweep rubber, with the railgear in the rail position, loosen the two ¼" fasteners which secure the rail sweep rubber to the rail sweep bracket. Slide the rail sweep rubber up or down for the correct clearance. Tighten and torque the ¼" fasteners to 12 ft-lbs dry. Do not over torque.

RAIL WHEEL LOAD ADJUSTMENT

During rail travel, the railgear removes a predetermined portion of the vehicle's load from the vehicle's wheels and carries it on the rail wheels. A minimum amount of load must be maintained on the rail wheels in order to avoid derailment. Likewise, a minimum amount of load must be maintained on the vehicle wheels in order to provide traction for acceleration and braking, this load at installation must be a minimum of 450 lbs and a maximum of 750 lbs and is checked as described below using a bottle jack equipped with a gauge.

The rail wheel load should be adjusted following the installation of the railgear and once the vehicle has had all its permanent load (service body, crane, welders, etc) installed. The rail wheel load requires periodic checks; however, it should only require re-adjustment if the railgear is moved, the permanent vehicle equipment is changed, or the vehicle suspension settles or is changed. The rail wheel load should be checked at regular intervals that coincide with regular maintenance schedule for the vehicle or minimally once a year during vehicle annual FRA inspection. As non-permanent load is added to and/or removed from the vehicle, the rail wheel load will change also. This is acceptable as long as the weight ratings of the vehicle, axles, wheels, tires and railgear are not exceeded and as long as the minimum rail wheel load is maintained, and the maximum wheel load of 750 lbs is not exceeded.

Check each rail wheel load as follows:

1. Place the vehicle on a straight and level section of rail with the railgear lowered to the rail position. Ensure the railgear is taking load through the tread of the rail wheel and not on the flange of the rail wheel. The vehicle should only be carrying the permanently attached load (service body, crane, etc) and any always carried non-attached load (welders, etc) during this procedure. Do not include the operator or passengers. Ensure the vehicle's tires have been inflated to the manufacturer's recommended air pressure and that they are not in contact with any obstructions except the rails.

2. Place the hydraulic bottle jack on a solid surface beneath the rail wheel spindle housing and jack the rail wheel off the rail.

3. Insert a piece of paper between the rail and the rail wheel. Lower the jack until the rail wheel squeezes the paper so that it cannot be pulled out.

4. Slowly jack up the rail wheel while pulling on the paper and observe the jack gauge. When the paper can be pulled out, stop jacking.

5. Record the load or pressure reading on the jack gauge, if necessary, convert the pressure reading to a load reading using the supplied table

Table 3: Rail Wheel Load vs Jack Pressure and Bore

Jack Pressure (PSI)	Jack Cylinder Bore Diameter (inches)								
	7/8	15/16	1	1 1/16	1 1/8	1 3/16	1 1/4	1 5/16	1 3/8
540	320	370	420	480	540	600	660	730	800
560	340	390	440	500	560	620	690	760	830
580	350	400	460	510	580	640	710	780	860
600	360	410	470	530	600	660	740	810	890
620	370	430	490	550	620	690	760	840	920
640	380	440	500	570	640	710	790	870	950
660	400	460	520	590	660	730	810	890	980
680	410	470	530	600	680	750	830	920	1010
700	420	480	550	620	700	780	860	950	1040
720	430	500	570	640	720	800	880	970	1070
740	440	510	580	660	740	820	910	1000	1100
760	460	520	600	670	760	840	930	1030	1130
780	470	540	610	690	780	860	960	1060	1160
800	480	550	630	710	800	890	980	1080	1190
820	490	570	640	730	820	910	1010	1110	1220
840	510	580	660	740	830	930	1030	1140	1250
860	520	590	680	760	850	950	1060	1160	1280
880	530	610	690	780	870	970	1080	1190	1310
900	540	620	710	800	890	1000	1100	1220	1340
920	550	640	720	820	910	1020	1130	1240	1370
940	570	650	740	830	930	1040	1150	1270	1400
960	580	660	750	850	950	1060	1180	1300	1430
980	590	680	770	870	970	1090	1200	1330	1460
1000	600	690	790	890	990	1110	1230	1350	1480
1020	610	700	800	900	1010	1130	1250	1380	1510
1040	630	720	820	920	1030	1150	1280	1410	1540
1060	640	730	830	940	1050	1170	1300	1430	1570
1080	650	750	850	960	1070	1200	1330	1460	1600
1100	660	760	860	980	1090	1220	1350	1490	1630
1120	670	770	880	990	1110	1240	1370	1520	1660
1140	690	790	900	1010	1130	1260	1400	1540	1690
1160	700	800	910	1030	1150	1280	1420	1570	1720
1180	710	810	930	1050	1170	1310	1450	1600	1750
1200	720	830	940	1060	1190	1330	1470	1620	1780
1220	730	840	960	1080	1210	1350	1500	1650	1810
1240	750	860	970	1100	1230	1370	1520	1680	1840
1260	760	870	990	1120	1250	1400	1550	1700	1870
1280	770	880	1010	1130	1270	1420	1570	1730	1900
1300	780	900	1020	1150	1290	1440	1600	1760	1930
1320	790	910	1040	1170	1310	1460	1620	1790	1960
1340	810	920	1050	1190	1330	1480	1640	1810	1990
1360	820	940	1070	1210	1350	1510	1670	1840	2020
1380	830	950	1080	1220	1370	1530	1690	1870	2050
1400	840	970	1100	1240	1390	1550	1720	1890	2080
1420	850	980	1120	1260	1410	1570	1740	1920	2110
1440	870	990	1130	1280	1430	1590	1770	1950	2140
1460	880	1010	1150	1290	1450	1620	1790	1980	2170
1480	890	1020	1160	1310	1470	1640	1820	2000	2200
1500	900	1040	1180	1330	1490	1660	1840	2030	2230
1520	910	1050	1190	1350	1510	1680	1870	2060	2260
1540	930	1060	1210	1370	1530	1710	1890	2080	2290
1560	940	1080	1230	1380	1550	1730	1910	2110	2320
1580	950	1090	1240	1400	1570	1750	1940	2140	2350
1600	960	1100	1260	1420	1590	1770	1960	2160	2380
1620	970	1120	1270	1440	1610	1790	1990	2190	2410
1640	990	1130	1290	1450	1630	1820	2010	2220	2440
1660	1000	1150	1300	1470	1650	1840	2040	2250	2460
1680	1010	1160	1320	1490	1670	1860	2060	2270	2490
1700	1020	1170	1340	1510	1690	1880	2090	2300	2520
1720	1030	1190	1350	1530	1710	1900	2110	2330	2550
1740	1050	1200	1370	1540	1730	1930	2140	2350	2580

Rail Wheel Load (lbs)

Adjust each rail wheel load as follows:

There are two rubber springs on the railgear located between the railgear lower cross frame and each adjustment rod. The adjustment rods are threaded into the railgear axle. The rubber springs support the load between the lower cross frame and the axle while a ¾" nylock nut on top of each guide tube prevents the axle from separating from the lower cross frame. The load on the rail wheels is adjusted by threading the adjustment rod into or out of the axle and moving the ¾" nylock nut in order to keep the rubber springs compressed at 3.5" while in the road position. There must be at least two threads passing through the ¾" nylock nut on top of the guide tubes. Both adjustment rods on the same railgear should be set at the same distance from the railgear axle.

1. Raise the railgear until the rail wheels are off the rails.

2. Loosen the ¾" jam nuts that secure the adjustment rods to the railgear axle and loosen the ¾" nylock nuts on top of the outer guide tubes.

3. Screw the adjustment rods into the axle to decrease the rail wheel loads or out of the axle to increase the rail wheel loads.

4. Lower the railgear to the rail position and re-check the rail wheel loads. Re-adjust the rail wheel loads if necessary.

5. The distance between the top of the axle and the bottom of the adjustment rod plates once adjusted should not exceed 2.5". If the correct rail wheel load cannot be achieved within this maximum distance, then railgear mounting shims will have to be added between the railgear and the railgear mounting brackets. Likewise, if the adjustment rods are threaded completely into the axle and the rail wheel load is still too high, then railgear mounting shims will have be removed from between the railgear and the railgear mounting brackets. The railgear alignment will have to be checked if shims are added or removed.

6. Raise the railgear until the rail wheels are off the rails. Tighten the ¾" jam nuts on the adjustment rods against the axle. Tighten the ¾" nylock nuts on top of the guide tubes so that the rubber springs are compressed to 3.5".

7. Lower the railgear to the rail position. Check that the ¾" nylock nuts are about ¾"-1" above the top of the guide tubes. This is the amount the rubber springs are able to extend.

8. Following the rail wheel load adjustment, the railgear may contact the vehicle if not enough clearance was left during installation. Check the railgear clearance to all vehicle components throughout the full range of railgear and railgear suspension movement. If there is interference with the vehicle bumper or exhaust, it can be trimmed and reinforced as required. Ensuring any exhaust system modifications conform to applicable laws and regulations.

RAILGEAR ALIGNMENT

The railgear must be correctly aligned in order to perform properly, safely, and avoid excessive wear and derailment. The rail wheels can be independently aligned for toe-in/toe-out and the railgear can be adjusted side to side (laterally) on the vehicle. A parallel line system and the following procedure should be used to perform the railgear alignment. G&B Specialties can also supply a special alignment tool kit (order part number R-066U) with which separate instructions are supplied.

The rail wheel loads should be checked and adjusted, the vehicle should have had a four-wheel alignment (with the complete railgear package installed on the vehicle and any suspension modifications done) and the tires should be properly inflated prior to performing the railgear alignment.

The railgear alignment is done with the vehicle on a straight and level section of rail with the railgear in the rail position and the vehicle wheels pointing straight ahead. The individual rail wheel alignment should be done first, followed by the lateral alignment of the railgear.

Each rail wheel is aligned by loosening the four ½" fasteners which secure it to the railgear axle. The rail wheel is then turned into alignment. The four ½" fasteners should then be tightened and torqued to 100 ft-lbs dry. Do not over torque.

The railgear is aligned laterally by loosening the four ¾" fasteners which secure it to the mounting plates. The railgear is then moved sideways into alignment. It may be necessary to raise the railgear off the rails to move the railgear side to side. Do not use any force against the railgear guide tubes as this may damage them and restrict suspension movement. The four ¾" fasteners should then be tightened and torqued to 175 ft-lbs dry. Do not over torque.

Refer to Figure 3 for alignment measurement and specifications. Use an 18" magnetic straight edge on the back of each rail wheel to measure from.

Following the railgear alignment, the railgear may contact the vehicle if not enough clearance was left during installation. Check the railgear clearance to all vehicle components throughout the full range of railgear and railgear suspension movement. If there is interference with the vehicle bumper, it can be trimmed and reinforced as required. If there is interference with the vehicle exhaust system, it can be bent to fit, ensuring any exhaust system modifications conform to applicable laws and regulations. If there is interference with any other vehicle components, please call G&B Specialties, Inc for technical assistance.

WHEEL WEAR STANDARDS AND RECOMMENDATIONS

At the present time, G&B produces 8”, 10”, 12”, 14”, and 16” steel wheels. Each size has a different flange and tread thickness, which dictates the allowable wear. Although the following numbers are recommended limits, risk of failure is increased when not followed. Rail gauge can be supplied by G&B Specialties for 8”, 10”, 12”, 14”, and 16” rail wheels. They are used as go/no go gauges. When placed on rail wheels they will indicate how much wear is still permissible or if the rail wheels need to be replaced.

The gauge for the R-290 model railgear can be ordered using the following part number; S-001200

- **Rail wheel failure can result in equipment damage or failure, personal injury or death.**

Flange Wear Limits:
The maximum flange wear is indicated on the rail wheel gauge. When the gauge is placed on the rail wheel, if a gap is seen between the gauge and the maximum flange wear line, the rail wheel needs to be replaced.

Tread Wear Limits:
For tread wear, use the following chart in conjunction with the appropriate rail wheel gauge.

NOMINAL RAIL WHEEL DIAMETER (INCHES)	MIN. ALLOWABLE WHEEL DIAMETER (INCHES)
10	9 3/4

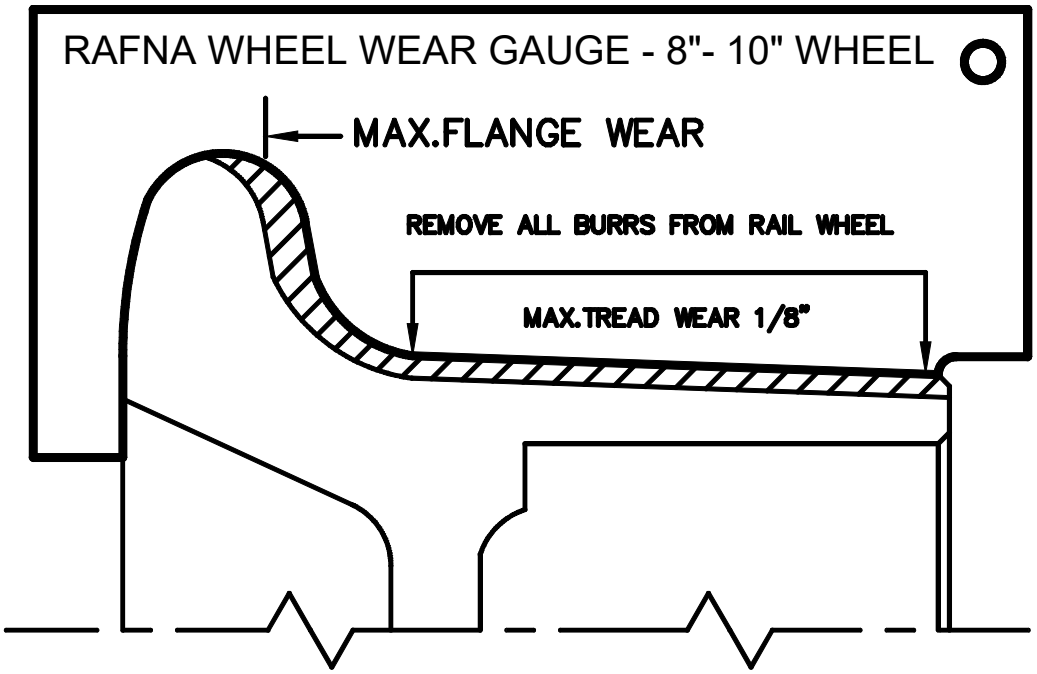

R-290 RAILGEAR – PRE-DELIVERY CHECK LIST

This checklist is provided to help ensure that the railgear is properly installed and adjusted prior to the vehicle being put in service. **To register this railgear installation, please fax a completed copy of both this form and the railgear alignment sheet to G&B Specialties, Inc. Service Manager at 570-802-0491.**

Railgear Model:	_____	Vehicle Year:	_____
Railgear Serial No.:	Frt _____	Vehicle Make:	_____
	Rr _____	Vehicle Model:	_____
Date Received:	_____	Vehicle VIN/Unit #:	_____
Date Completed:	_____	End User:	_____

Railgear Checks

1. _____ Rail wheel bearing end play adjusted (see manuals for procedure)
2. _____ Front & rear railgear over-center adjusted (see manuals for procedure)
3. _____ Rail sweeps adjusted (see manuals for procedure)
4. _____ Rail wheel load adjusted (see manuals & fill out values on alignment sheet)
5. _____ Rail wheel alignment performed (attach copy of alignment sheet)
6. _____ Front & rear railgear lock systems engage/disengage smoothly
7. _____ Lock cam converters installed on In-Cab Controls models only
8. _____ Safety lock pins installed on Full-In-Cab Controls models only
9. _____ Railgear components clear all vehicle component thru full range of motion
10. _____ Railgear operating decals installed next to controls
11. _____ Railgear pump decal installed next to dash switch (standard control models)
12. _____ Railgear manifold decals installed on manual over-rides
13. _____ Steering wheel lock decal installed on dash
14. _____ Steering wheel lock installed
15. _____ All railgear joints lubricated (see manuals for lubrication points)

Wheel Kit Checks

16. _____ Vehicle turning stop blocks installed
17. _____ Wheel and spacer lug nuts tightened (see manuals for specifications)
18. _____ Wheel lug nut torque value decals installed on wheels
19. _____ Wheels & tires clear all vehicle components thru full range of motion

Hydraulic Checks

20. _____ Hydraulic lock valves installed with correct orientation (ICC & FCC only)
21. _____ Air bled from railgear hydraulic system
22. _____ Pump tank filled as required with hydraulic fluid
23. _____ Railgear pump relief valve adjusted (see manuals for procedure)
24. _____ All hydraulic hoses clear of hot / sharp edges and tied back
25. _____ No hydraulic oil leaks – at pump, manifold, hoses, fittings, and cylinders

Electrical Checks

26. _____ Pump and manifold ground wire installed
27. _____ All connections soldered and heat shrink sealed (no crimps)
28. _____ Split loom used to protect all exposed wiring
29. _____ All wires clear of hot / sharp edges and tied back

Miscellaneous Checks

30. _____ All welded / heated / bare metal painted
31. _____ Exterior railgear controls operate railgear correctly
32. _____ In-Cab controls operate railgear correctly (ICC and FCC only)
33. _____ Emergency hand pump and manifold over-rides operate railgear correctly
34. _____ All fasteners are tightened (see manuals for specifications)
35. _____ Vehicle track tested
36. _____ Vehicle road tested at highway speeds
37. _____ All railgear manuals are placed in the vehicle for the operator
38. _____ Alter exhaust pipe to clear rail gear
39. _____ Install new tire pressure stickers.
40. _____ Reprogram TPS sensors.

Installed By: _____ Inspected By: _____

Company: _____ Company: _____

Comments:

RAFNA RAILGEAR ALIGNMENT RACK DATA

GAS OR DIESEL VIN#_____

VEHICLE MAKE:_____ VEHICLE MODEL:_____ VEHICLE YEAR:_____
DOOR STICKER GVWR:_____ DOOR STICKER GAWR FRT:_____ DOOR STICKER GAWR RR_____
RAILGEAR S/N: FRT_____ RR_____ VEHICLE UNIT #,S/N:_____
RAILGEAR TYPE:_____ INSTALLER: _____ DATE: _____

SET UP PARALLEL STRING LINES
A & B MUST BE EQUAL WITHIN 1/32"
C & D MUST BE EQUAL WITHIN 1/32"

ADJUST STRING LINES AROUND VEHICLE
E, F, G, & H MUST BE EQUAL WITHIN 1/16"
I, J, K, & L MUST BE EQUAL WITHIN 1/16"
(E, F, G, & H MAY NOT EQUAL I, J, K, & L)

ADJUST RAIL WHEEL ALIGNMENT
M & O MUST BE EQUAL WITHIN 1/16"
N & P MUST BE EQUAL WITHIN 1/16"
Q & S MUST BE EQUAL WITHIN 1/16"
R & T MUST BE EQUAL WITHIN 1/16"

ADJUST RAILGEAR LATERAL ALIGNMENT
M & O MUST EQUAL N & P WITHIN 1/8"
Q & S MUST EQUAL R & T WITHIN 1/8"

ENSURE THAT U & V ARE BETWEEN
53– 7/16" AND 53—9/16"

OVER-CENTER ANGLE (DEGREE)
FRONT_____
REAR _____

RAIL WHEEL LOADS (LBS)
LEFT FRONT _____RIGHT FRONT_____
LEFT REAR _____ RIGHT REAR _____

RAIL WHEEL FLANGE TO GROUND CLEARANCE
LEFT FRONT _____RIGHT FRONT_____
LEFT REAR _____ RIGHT REAR _____

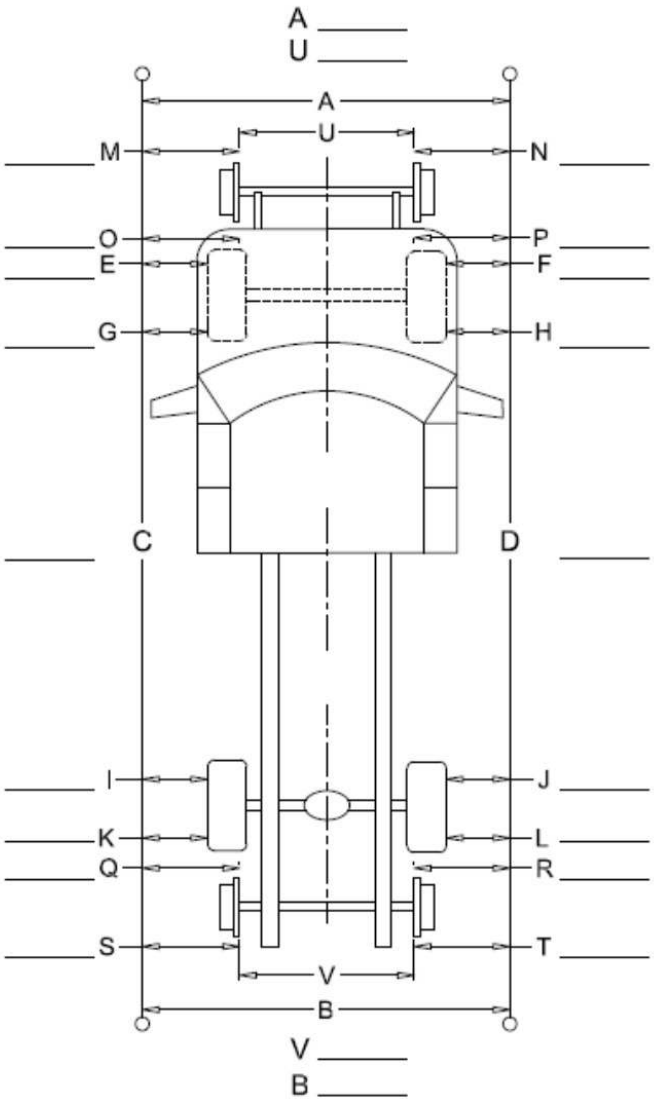

MOUNTING HEIGHT FRONT: _____ MOUNTING HEIGHT REAR: _____

STOCK TURNING DIAMETER: _____ **MODIFIED** TURNING DIAMETER: _____

OEM: VEHICLE WEIGHT: _____ FRONT GAWR: _____ REAR GAWR: _____

MODIFIED: VEHICLE WEIGHT: _____FRONT GAWR: _____REAR GAWR:_____

FAX COMPLETED FORM TO JAKE SANUTE AT FAX # 570-802-0491

MAY 31, 2018 REV "D"

RAFNA RAILGEAR PORTABLE ALIGNMENT DATA

GAS OR DIESEL VIN#_____

VEHICLE MAKE:_____ VEHICLE MODEL:_____ VEHICLE YEAR:_____
DOOR STICKER GVWR:_____ DOOR STICKER GAWR FRT:_____ DOOR STICKER GAWR RR_____
RAILGEAR S/N: FRT_____ RR_____ VEHICLE UNIT #,S/N:_____
RAILGEAR TYPE:_____ INSTALLER: _____ DATE: _____

ADJUST RAILGEAR LATERAL ALIGNMENT
A MUST EQUAL B WITHIN 1/8"
C MUST EQUAL D WITHIN 1/8"

ENSURE THAT U & V ARE BETWEEN
53– 7/16" AND 53—9/16"

OVER-CENTER ANGLE (DEGREE)
FRONT_____
REAR _____

RAIL WHEEL LOADS (LBS)
LEFT FRONT _____RIGHT FRONT_____
LEFT REAR _____ RIGHT REAR _____

RAIL WHEEL FLANGE TO GROUND CLEARANCE
LEFT FRONT _____RIGHT FRONT_____
LEFT REAR _____ RIGHT REAR _____

U _____

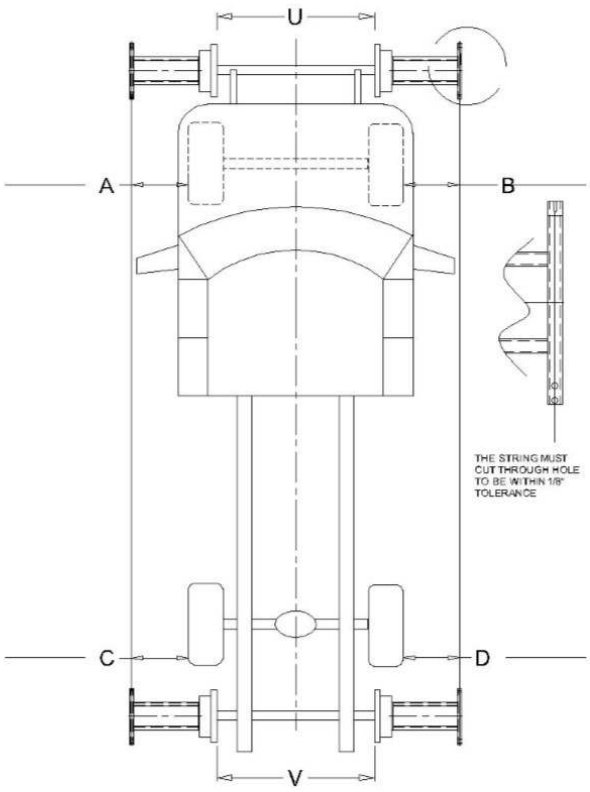

V _____

MOUNTING HEIGHT FRONT: _____ MOUNTING HEIGHT REAR: _____

STOCK TURNING DIAMETER: _____ **MODIFIED** TURNING DIAMETER: _____

OEM: VEHICLE WEIGHT: _____ FRONT GAWR: _____ REAR GAWR: _____

MODIFIED: VEHICLE WEIGHT: _____FRONT GAWR: _____REAR GAWR:_____

FAX COMPLETED FORM TO JAKE SANUTE AT FAX # 570-802-0491

MAY 31, 2018 REV B

PARTS OF RAILGEAR KIT

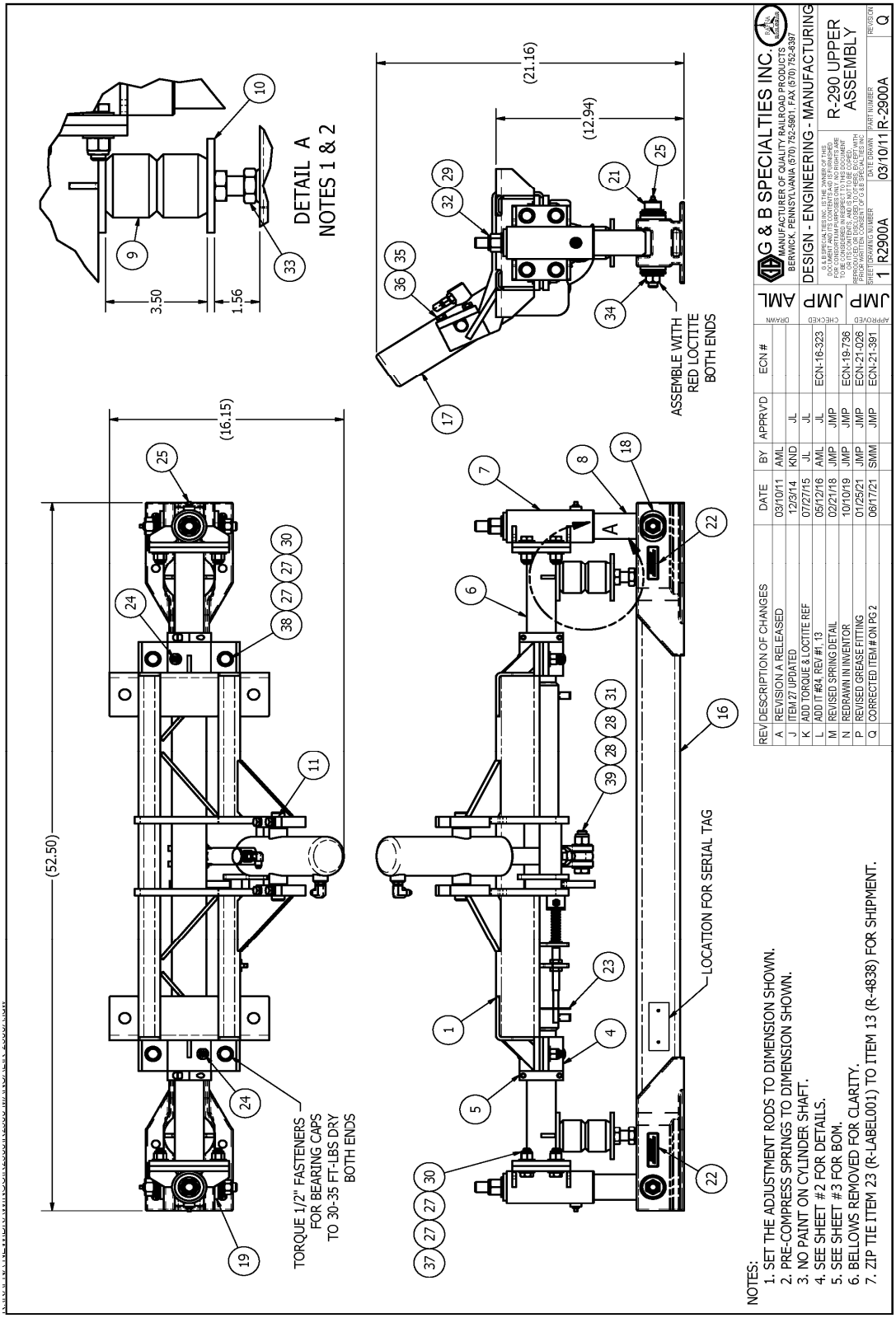

R-2900A

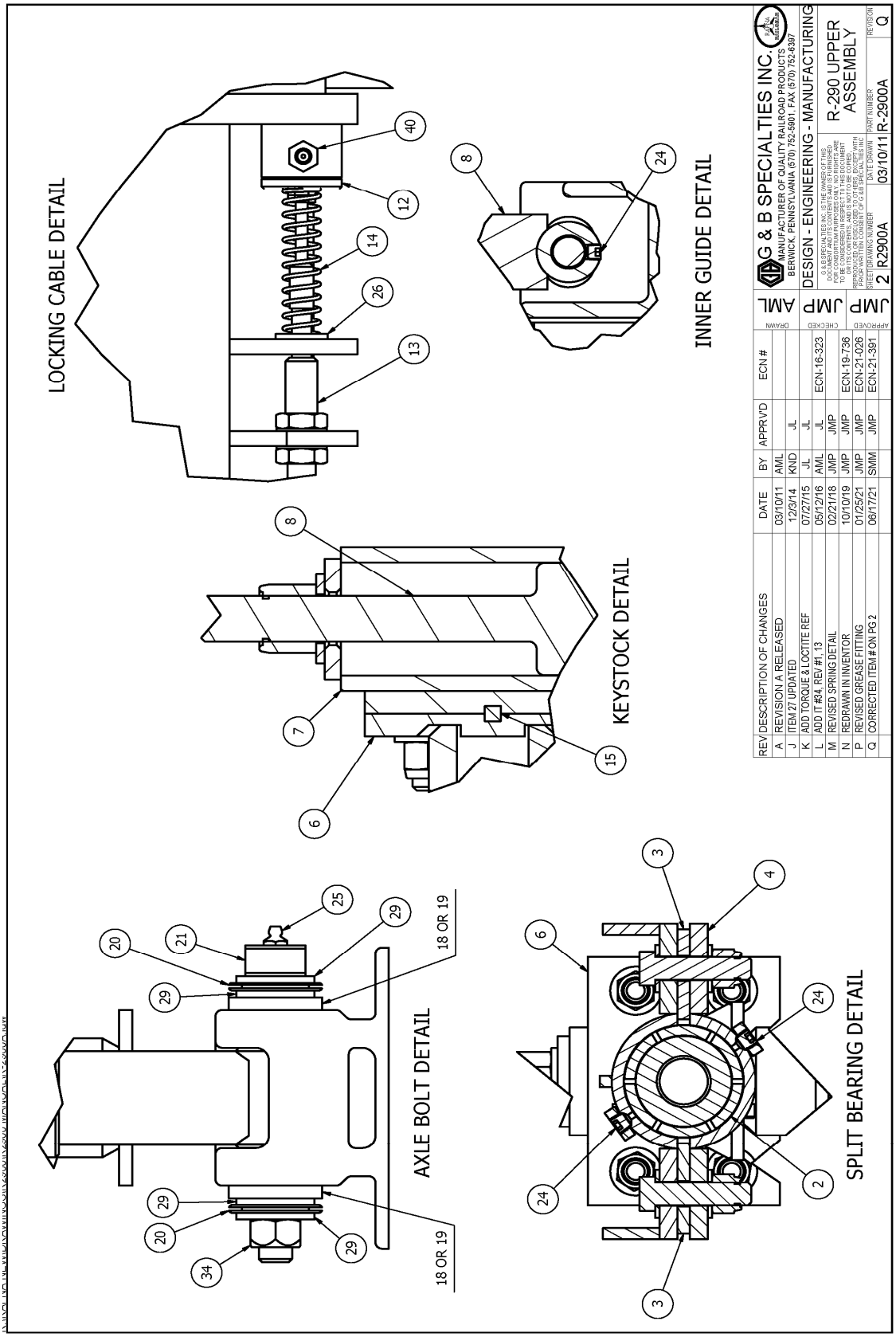
LOCKING CABLE DETAIL
INNER GUIDE DETAIL
KEYSTOCK DETAIL
AXLE BOLT DETAIL
SPLIT BEARING DETAIL
18 OR 19
18 OR 19
REV DESCRIPTION OF CHANGES DATE BY APPRV'D ECN # DRAWN CHECKED APPROVED
A REVISION A RELEASED 03/10/11 AML AML
J ITEM 27 UPDATED 12/3/14 KND JL
K ADD TORQUE & LOCTITE REF 07/27/15 JL JL JMP
L ADD IT #34, REV #1, 13 05/12/16 AML JL ECN-16-323
M REVISED SPRING DETAIL 02/21/18 JMP JMP
N REDRAWN IN INVENTOR 10/10/19 JMP JMP ECN-19-736
P REVISED GREASE FITTING 01/25/21 JMP JMP ECN-21-026
Q CORRECTED ITEM # ON PG 2 06/17/21 SMM JMP ECN-21-391
G & B SPECIALTIES INC.
MANUFACTURER OF QUALITY RAILROAD PRODUCTS
BERWICK, PENNSYLVANIA (570) 752-5901, FAX (570) 752-6397
DESIGN - ENGINEERING - MANUFACTURING
G.&B.SPECIALTIES INC. IS THE OWNER OF THIS DOCUMENT AND ITS CONTENTS AND IS FURNISHED FOR CONFIDENTIAL USE ONLY. THIS DOCUMENT MUST NOT TO BE CONSIDERED IN RESPECT TO THIS DOCUMENT OR ITS CONTENTS, AND IS NOT TO BE COPIED, REPRODUCED OR DISCLOSED TO OTHERS WITHOUT PRIOR WRITTEN CONSENT OF G &B SPECIALTIES INC.
R-290 UPPER ASSEMBLY
SHEET DRAWING NUMBER 2 R2900A
DATE DRAWN 03/10/11
PART NUMBER R-2900A
REVISION Q

R-2900A

PARTS LIST				PARTS LIST			
ITEM	PART NUMBER	DESCRIPTION	QTY	ITEM	PART NUMBER	DESCRIPTION	QTY
1	R-2910	FRAME, UPPER CROSS	1	21	R-29042	PIN	2
2	R-3618	SPLIT BEARING SET, NYLON	2	22	Z-LABEL025	LABEL, AXLE WARNING	2
3	R-3602A	SHIM	4	23	R-LABEL001	LABEL, PULL TO UNLOCK	1
4	R-3602B	BEARING END CAP	2	24	R-125	PLUG, 1/8 NPT PIPE	6
5	R-2589	SPLIT COLLAR	2	25	990900-009	FITTING, 1/8 NPT STRAIGHT	4
6	R-2920	FRAME, LOWER CROSS	1	26	990600-037-002	WASHER, 3/8" FLAT TYPE-A NARROW	1
7	R-2941	OUTER GUIDE TUBE ASSEMBLY	2	27	990600-050-002	WASHER, 1/2" FLAT TYPE-A NARROW	24
8	R-2944	INNER GUIDE TUBE ASSEMBLY	2	28	990600-062-002	WASHER, 5/8" FLAT TYPE-A NARROW	2
9	R-130	SPRING, TIMBREN	2	29	990600-075-002	WASHER, 3/4" FLAT TYPE-A NARROW	10
10	R-2948	ADJUSTMENT ROD	2	30	990316-050-22	NUT, 1/2" NYLOCK GR.8 Z/Y	12
11	R-2950	TRUNNION CAP	2	31	990316-062-22	NUT, 5/8" NYLOCK GR.8 Z/Y	1
12	R-2940	LOCKING PIN	1	32	990316-075-22	NUT, 3/4" NYLOCK GR.8 Z/Y	2
13	R-4838	LOCKING CABLE ASSEMBLY	1	33	990330-075-02	NUT, 3/4" HVY HEX JAM Z/Y	2
14	R-3561	SPRING	1	34	038066-062-22	NUT, 5/8" TOPLOCK GR.9 Z/Y	2
15	SB025-025	KEYSTOCK, 1/4" SQUARE X 4"	2	35	990402-037-02	WASHER, 3/8" HVY LOCK Z/Y	4
16	R-2930-1	AXLE	1	36	990725-125-22	SCREW, 3/8" X 1-1/4" HHCS GR.8 Z/Y	4
17	R-9115	HYDRAULIC CYLINDER ASSEMBLY	1	37	990727-175-22	SCREW, 1/2" X 1-3/4" HHCS GR.8 Z/Y	8
18	R-29041	SLOTTED BUSHING	2	38	990727-200-22	SCREW, 1/2" X 2" HHCS GR.8 Z/Y	4
19	R-29041A	BUSHING	2	39	990729-275-22	SCREW, 5/8" X 2-3/4" HHCS GR.8 Z/Y	1
20	R-1505	BELLOWS	2	40	990900-023	FITTING, 1/8 NPT STRAIGHT - SHORT	1

REV	DESCRIPTION OF CHANGES	DATE	BY	APPRV'D	ECN #
A	REVISION A RELEASED	03/10/11	AML		
J	ITEM 27 UPDATED	12/03/14	KND	JL	
K	ADD TORQUE & LOCTITE REF	07/27/15	JL	JL	
L	ADD IT #34, REV #1, 13	05/12/16	AML	JL	ECN-16-323
M	REVISED SPRING DETAIL	02/21/18	JMP	JMP	
N	REDRAWN IN INVENTOR	10/10/19	JMP	JMP	ECN-19-736
P	REVISED GREASE FITTING	01/25/21	JMP	JMP	ECN-21-026
Q	CORRECTED ITEM # ON PG 2	06/17/21	SMM	JMP	ECN-21-391

DRAWN AML
CHECKED JMP
APPROVED JMP

G & B SPECIALTIES INC.
MANUFACTURER OF QUALITY RAILROAD PRODUCTS
BERWICK, PENNSYLVANIA (570) 752-5901, FAX (570) 752-6397
DESIGN - ENGINEERING - MANUFACTURING

G & B SPECIALTIES INC. IS THE OWNER OF THIS DOCUMENT AND ITS CONTENTS AND IS FURNISHED FOR CONSORTIUM PURPOSES ONLY. NO RIGHTS ARE TO BE CONSIDERED IN RESPECT TO THIS DOCUMENT OR ITS CONTENTS, AND IS NOT TO BE COPIED, REPRODUCED OR DISCLOSED TO OTHERS, EXCEPT WITH PRIOR WRITTEN CONSENT OF G & B SPECIALTIES INC.

R-290 UPPER ASSEMBLY

SHEET	DRAWING NUMBER	DATE DRAWN	PART NUMBER	REVISION
3	R2900A	03/10/11	R-2900A	Q

R-2900A

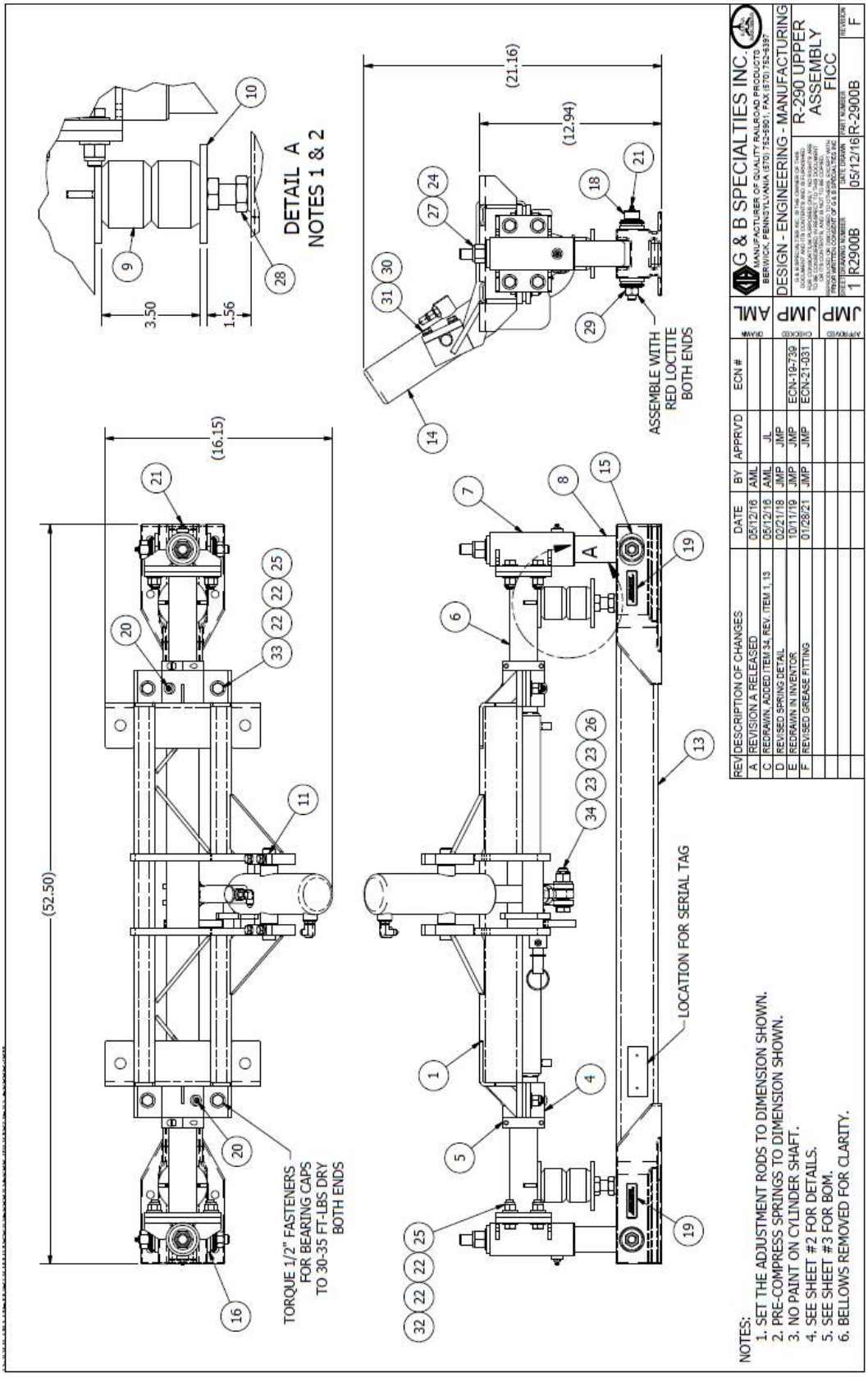
DETAIL A
NOTES 1 & 2
3.50
1.56
(21.16)
(12.94)
(16.15)
(52.50)
ASSEMBLE WITH
RED LOCTITE
BOTH ENDS
LOCATION FOR SERIAL TAG
TORQUE 1/2" FASTENERS
FOR BEARING CAPS
TO 30-35 FT-LBS DRY
BOTH ENDS
NOTES:
1. SET THE ADJUSTMENT RODS TO DIMENSION SHOWN.
2. PRE-COMPRESS SPRINGS TO DIMENSION SHOWN.
3. NO PAINT ON CYLINDER SHAFT.
4. SEE SHEET #2 FOR DETAILS.
5. SEE SHEET #3 FOR BOM.
6. BELLOWS REMOVED FOR CLARITY.
REV DESCRIPTION OF CHANGES DATE BY APPR'VD ECN #
A REVISION A RELEASED 05/12/16 AML
C REDRAWN, ADDED ITEM 34, REV. ITEM 1, 13 05/12/16 AML JL
D REVISED SPRING DETAIL 02/21/18 JMP
E REDRAWN IN INVENTOR 10/11/19 JMP JMP ECN-19-739
F REVISED GREASE FITTING 01/28/21 JMP JMP ECN-21-031
DRAWN AML
CHECKED JMP
APPROVED JMP
G & B SPECIALTIES INC.
MANUFACTURER OF QUALITY RAILROAD PRODUCTS
BERWICK, PENNSYLVANIA (570) 752-5901, FAX (570) 752-6397
DESIGN - ENGINEERING - MANUFACTURING
R-290 UPPER
ASSEMBLY
FICC
SHEET DRAWING NUMBER 1 R2900B
DATE DRAWN 05/12/16
PART NUMBER R-2900B
REVISION F

R-2900B (FICC)

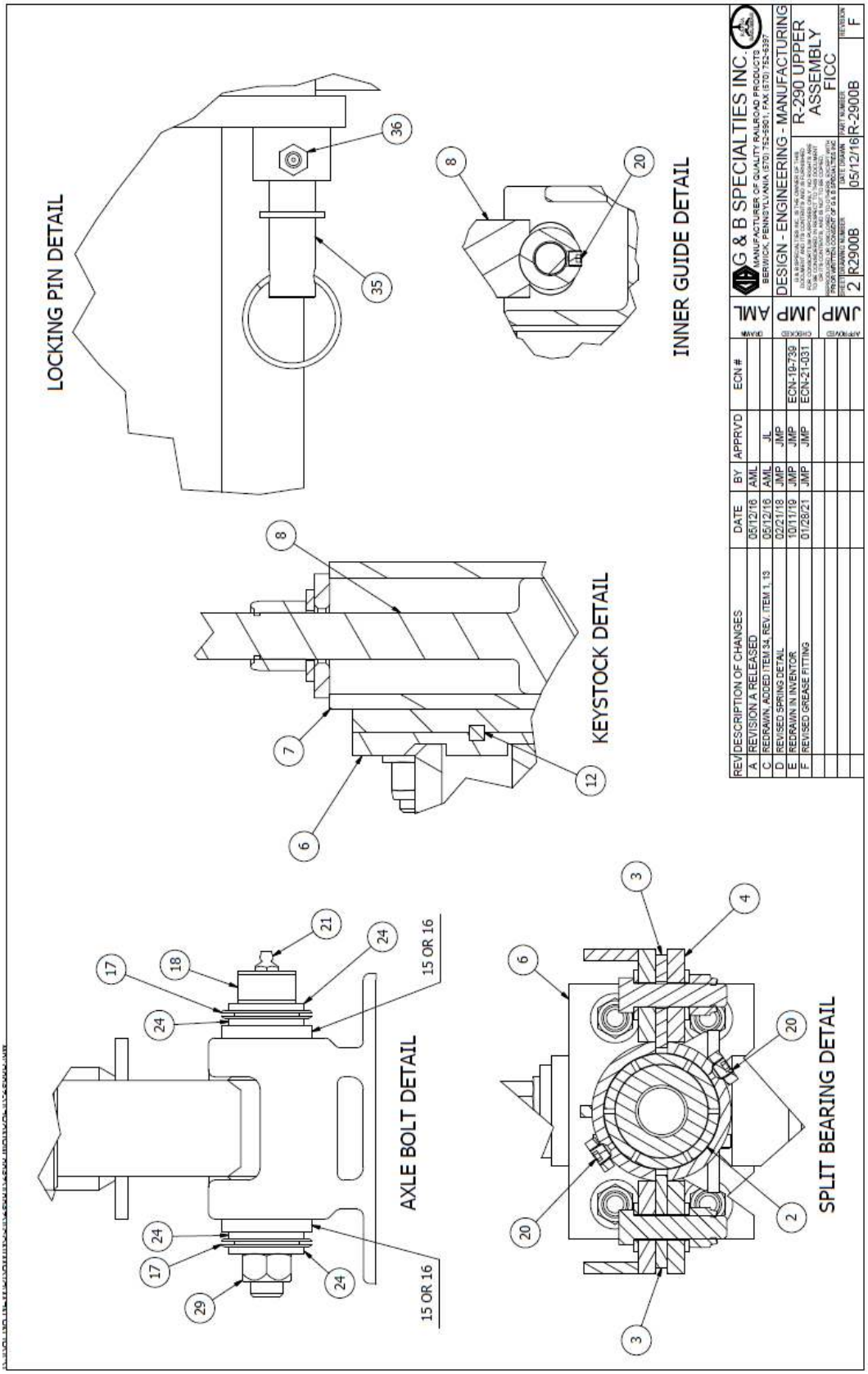
LOCKING PIN DETAIL
INNER GUIDE DETAIL
KEYSTOCK DETAIL
AXLE BOLT DETAIL
SPLIT BEARING DETAIL
15 OR 16
15 OR 16
REV DESCRIPTION OF CHANGES DATE BY APPRV'D ECN #
A REVISION A RELEASED 05/12/18 AML
C REDRAWN, ADDED ITEM 34, REV. ITEM 1, 13 05/12/18 AML JL
D REVISED SPRING DETAIL 02/21/18 JMP JMP
E REDRAWN IN INVENTOR 10/11/19 JMP JMP ECN-19-739
F REVISED GREASE FITTING 01/28/21 JMP JMP ECN-21-031
DRAWN AML
CHECKED JMP
APPROVED JMP
G & B SPECIALTIES INC.
MANUFACTURER OF QUALITY RAILROAD PRODUCTS
BERWICK, PENNSYLVANIA (570) 752-5901, FAX (570) 752-6397
DESIGN - ENGINEERING - MANUFACTURING
R-290 UPPER ASSEMBLY FICC
SHEET NUMBER 2
DRAWING NUMBER R2900B
DATE DRAWN 05/12/18
PART NUMBER R-2900B
REVISION F

R-2900B (FICC)

PARTS LIST				PARTS LIST			
ITEM	PART NUMBER	DESCRIPTION	QTY	ITEM	PART NUMBER	DESCRIPTION	QTY
1	R-2910A	FRAME, UPPER CROSS	1	19	Z-LABEL025	LABEL, AXLE WARNING	2
2	R-3618	SPLIT BEARING SET, NYLON	2	20	R-125	PLUG, 1/8 NPT PIPE	6
3	R-3602A	SHIM	4	21	990900-009	FITTING, 1/8 NPT STRAIGHT	5
4	R-3602B	BEARING END CAP	2	22	990600-050-002	WASHER, 1/2" FLAT TYPE-A NARROW	24
5	R-2589	SPLIT COLLAR	2	23	990600-062-002	WASHER, 5/8" FLAT TYPE-A NARROW	2
6	R-2920	FRAME, LOWER CROSS	1	24	990600-075-002	WASHER, 3/4" FLAT TYPE-A NARROW	10
7	R-2941	OUTER GUIDE TUBE ASSEMBLY	2	25	990316-050-22	NUT, 1/2" NYLOCK GR.8 Z/Y	12
8	R-2944	INNER GUIDE TUBE ASSEMBLY	2	26	990316-062-22	NUT, 5/8" NYLOCK GR.8 Z/Y	1
9	R-130	SPRING, TIMBREN	2	27	990316-075-22	NUT, NYLOCK 3/4" GR.8 Z/Y	2
10	R-2948	ADJUSTMENT ROD	2	28	990330-075-02	NUT, 3/4" HVY HEX JAM Z/Y	2
11	R-2950	TRUNNION CAP	2	29	038066-062-22	NUT, 5/8" TOPLOCK GR.9 Z/Y	2
12	SB025-025	KEYSTOCK, 1/4" SQUARE X 4"	2	30	990402-037-02	WASHER, 3/8" HVY LOCK Z/Y	4
13	R-2930-1	AXLE	1	31	990725-125-22	SCREW, 3/8" X 1-1/4" HHCS GR.8 Z/Y	4
14	R-9115	HYDRAULIC CYLINDER ASSEMBLY	1	32	990727-175-22	SCREW, 1/2" X 1-3/4" HHCS GR.8 Z/Y	8
15	R-29041	SLOTTED BUSHING	2	33	990727-200-22	SCREW, 1/2" X 2" HHCS GR.8 Z/Y	4
16	R-29041A	BUSHING	2	34	990729-275-22	SCREW, 5/8" X 2-3/4" HHCS GR.8 Z/Y	1
17	R-1505	BELLOWS	2	35	S-001011	PIN, QUICK RELEASE	1
18	R-29042	PIN	2	36	990900-023	FITTING, 1/8 NPT STRAIGHT - SHORT	1

REV	DESCRIPTION OF CHANGES	DATE	BY	APPRV'D	ECN #
A	REVISION A RELEASED	05/12/16	AML		
C	REDRAWN, ADDED ITEM 34, REV. ITEM 1, 13	05/12/16	AML	JL	ECN-16-323
D	REVISED SPRING DETAIL	02/21/18	JMP	JMP	
E	REDRAWN IN INVENTOR	10/11/19	JMP	JMP	ECN-19-739
F	REVISED GREASE FITTING	01/28/21	JMP	JMP	ECN-21-031

DRAWN AML
CHECKED JMP
APPROVED JMP

G & B SPECIALTIES INC.
MANUFACTURER OF QUALITY RAILROAD PRODUCTS
BERWICK, PENNSYLVANIA (570) 752-5901, FAX (570) 752-6397

DESIGN - ENGINEERING - MANUFACTURING

G & B SPECIALTIES INC. IS THE OWNER OF THIS DOCUMENT AND ITS CONTENTS AND IS FURNISHED FOR CONSORTIUM PURPOSES ONLY. NO RIGHTS ARE TO BE CONSIDERED IN RESPECT TO THIS DOCUMENT OR ITS CONTENTS, AND IS NOT TO BE COPIED, REPRODUCED OR DISCLOSED TO OTHERS, EXCEPT WITH PRIOR WRITTEN CONSENT OF G & B SPECIALTIES INC.

R-290 UPPER ASSEMBLY FICC

SHEET	DRAWING NUMBER	DATE DRAWN	PART NUMBER	REVISION
3	R2900B	05/12/16	R-2900B	F

R-2900B (FICC)

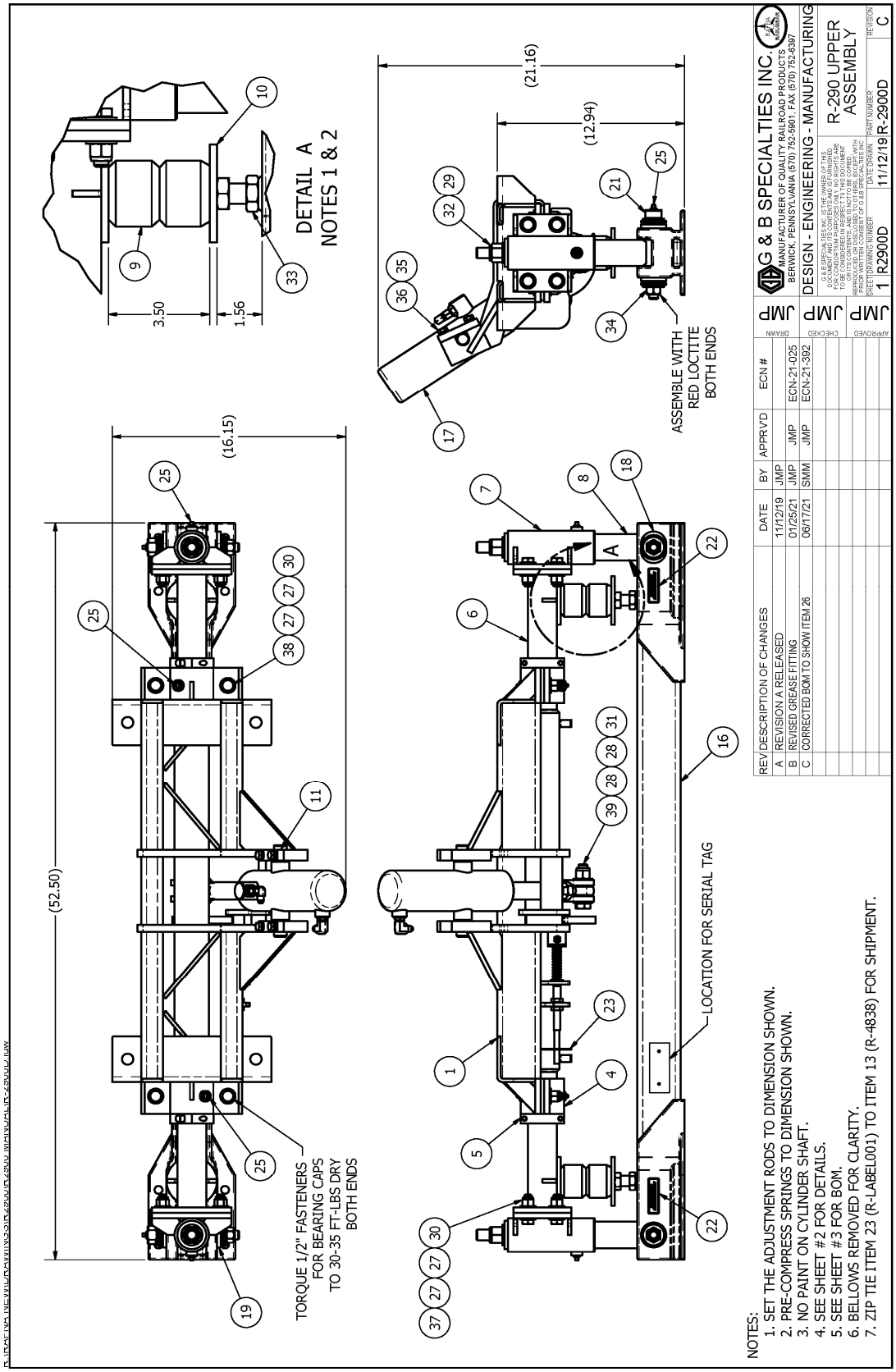

R-2900D (BRONZE BUSHINGS)

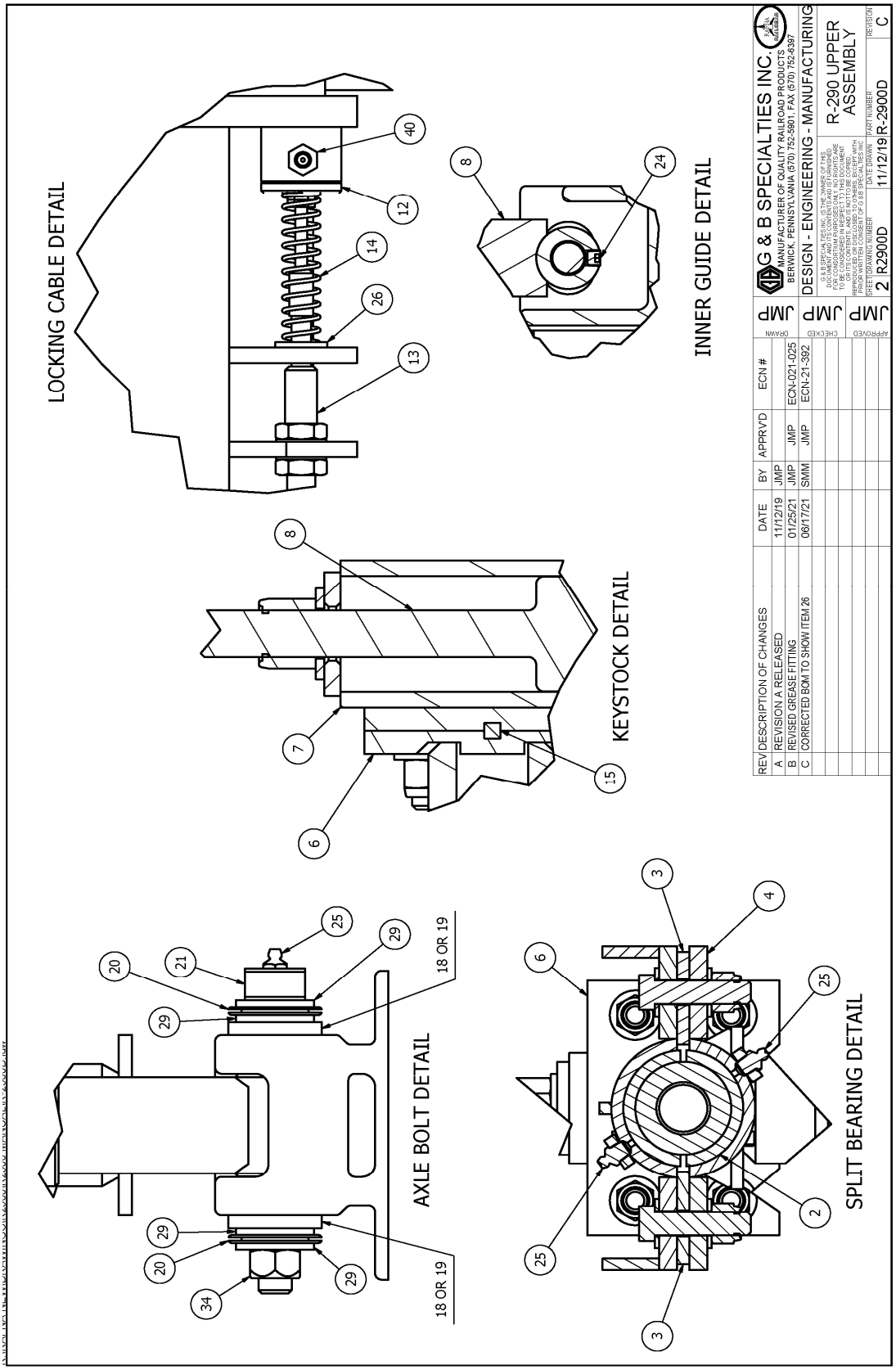

R-2900D (BRONZE BUSHINGS)

R:\RAFNA NEW\DRAWINGS\R2900\R2900 MANUAL\R-2900D.iw

PARTS LIST				PARTS LIST			
ITEM	PART NUMBER	DESCRIPTION	QTY	ITEM	PART NUMBER	DESCRIPTION	QTY
1	R-2910	FRAME, UPPER CROSS	1	21	R-29042	PIN	2
2	R-3618	SPLIT BEARING SET, BRONZE	2	22	Z-LABEL025	LABEL, AXLE WARNING	2
3	R-3602A	SHIM	4	23	R-LABEL001	LABEL, PULL TO UNLOCK	1
4	R-3602B	BEARING END CAP	2	24	R-125	PLUG, 1/8 NPT PIPE	2
5	R-2589	SPLIT COLLAR	2	25	990900-009	FITTING, 1/8 NPT STRAIGHT	8
6	R-2920	FRAME, LOWER CROSS	1	26	990600-037-002	WASHER, 3/8"" FLAT TYPE-A NARROW	1
7	R-2941	OUTER GUIDE TUBE ASSEMBLY	2	27	990600-050-002	WASHER, 1/2" FLAT TYPE-A NARROW	24
8	R-2944	INNER GUIDE TUBE ASSEMBLY	2	28	990600-062-002	WASHER, 5/8" FLAT TYPE-A NARROW	2
9	R-130	SPRING, TIMBREN	2	29	990600-075-002	WASHER, 3/4" FLAT TYPE-A NARROW	10
10	R-2948	ADJUSTMENT ROD	2	30	990316-050-22	NUT, 1/2" NYLOCK GR.8 Z/Y	12
11	R-2950	TRUNNION CAP	2	31	990316-062-22	NUT, 5/8" NYLOCK GR.8 Z/Y	1
12	R-2940	LOCKING PIN	1	32	990316-075-22	NUT, 3/4" NYLOCK GR.8 Z/Y	2
13	R-4838	LOCKING CABLE ASSEMBLY	1	33	990330-075-02	NUT, 3/4" HVY HEX JAM Z/Y	2
14	R-3561	SPRING	1	34	038066-062-22	NUT, 5/8" TOPLOCK GR.9 Z/Y	2
15	SB025-025	KEYSTOCK, 1/4" SQUARE X 4"	2	35	990402-037-02	WASHER, 3/8" HVY LOCK Z/Y	4
16	R-2930-1	AXLE	1	36	990725-125-22	SCREW, 3/8" X 1-1/4" HHCS GR.8 Z/Y	4
17	R-9115	HYDRAULIC CYLINDER ASSEMBLY	1	37	990727-175-22	SCREW, 1/2" X 1-3/4" HHCS GR.8 Z/Y	8
18	R-29041	SLOTTED BUSHING	2	38	990727-200-22	SCREW, 1/2" X 2" HHCS GR.8 Z/Y	4
19	R-29041A	BUSHING	2	39	990729-275-22	SCREW, 5/8" X 2-3/4" HHCS GR.8 Z/Y	1
20	R-1505	BELLOWS	2	40	990900-023	FITTING, 1/8 NPT STRAIGHT - SHORT	1

REV	DESCRIPTION OF CHANGES	DATE	BY	APPRV'D	ECN #
A	REVISION A RELEASED	11/12/19	JMP		
B	REVISED GREASE FITTING	01/25/21	JMP	JMP	ECN-21-025
C	CORRECTED BOM TO SHOW ITEM 26	06/17/21	SMM	JMP	ECN-21-392

DRAWN JMP
CHECKED JMP
APPROVED JMP

G & B SPECIALTIES INC.
MANUFACTURER OF QUALITY RAILROAD PRODUCTS
BERWICK, PENNSYLVANIA (570) 752-5901, FAX (570) 752-6397

DESIGN - ENGINEERING - MANUFACTURING

G & B SPECIALTIES INC. IS THE OWNER OF THIS DOCUMENT AND ITS CONTENTS AND IS FURNISHED FOR CONSORTIUM PURPOSES ONLY. NO RIGHTS ARE TO BE CONSIDERED IN RESPECT TO THIS DOCUMENT OR ITS CONTENTS, AND IS NOT TO BE COPIED, REPRODUCED OR DISCLOSED TO OTHERS, EXCEPT WITH PRIOR WRITTEN CONSENT OF G & B SPECIALTIES INC.

R-290 UPPER ASSEMBLY

SHEET	DRAWING NUMBER	DATE DRAWN	PART NUMBER	REVISION
3	R2900D	11/12/19	R-2900D	C

R-2900D (BRONZE BUSHINGS)

NOTES:
1. ASSEMBLE AS SHOWN.
2. BEARINGS ARE TO BE PACKED WITH GREASE AT ASSEMBLY. USE MYSTIK JT-6 LOW TEMP GREASE OR EQUIVELANT.
3. BEARING TORQUE PROCEDURE:
   A.) While rotating the rail wheel forward, torque the bearing nut to 20 ft-lbs., loosen nut and repeat.
   B.) Loosen the bearing nut and re-torque to 6 ft-lbs.
   C.) Check bearing end play with a magnetic dial indicator. End play should be within 0.001" - 0.005"
   D.) If bearing end play is not within the required specification, bearings should be re-torqued following the procedure outlined in steps A thru C.

ESTIMATED ASSEMBLY WEIGHT: 70LBS

BILL OF MATERIAL/PARTS LIST

ITEM	QTY	PART NUMBER	DESCRIPTION
1	1	R-1600D	10" WHEEL SUB-ASSEMBLY
2	2	R-011	TAPERED ROLLER BEARING CUP (#LM104911)
3	2	R-010	TAPERED ROLLER BEARING CONE (#LM104949)
4	1	R-017A	GASKET
5	1	R-017	HUB CAP ASSEMBLY (10" WHEEL)
6	1	R-009	OIL SEAL (#471271)
7	1	R-014	SLOTTED WASHER
8	1	990507-125-02	3/16" x 2" LG. Z/Y COTTER PIN
9	1	R-016	3/4" SLOTTED HEX NUT
10	3	990722-075-22F	1/4" x 3/4" LG. GR.8 H.H.C.S.
11	3	990402-025-02	1/4" GR.8 LOCK WASHER
12	1	990900-009	1/8" NPT - STRAIGHT GREASE ZERK
13	1	R-020	10" STEEL WHEEL
14	4	990727-175-22	1/2" X 1 3/4" Lg. GR. 8 H.H.C.S.
15	8	990600-050-002	1/2" Gr. 8 FLAT WASHER
16	4	990316-050-22	1/2" Gr. 8 NYLOCK NUT

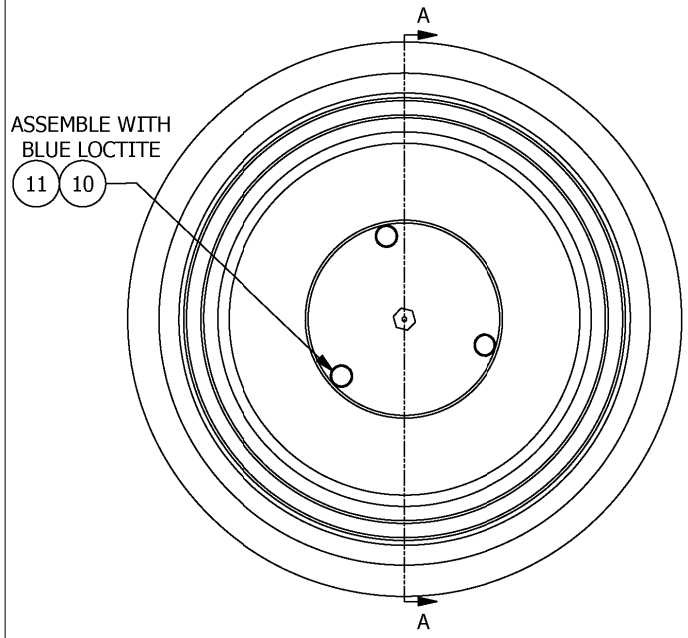

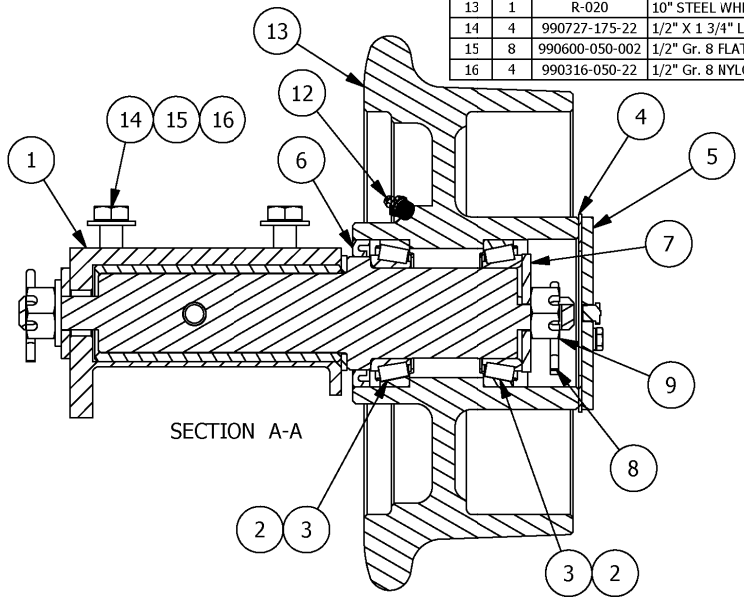

SECTION A-A

REV	DESCRIPTION OF CHANGES	DATE	BY	APPRV'D	ECN #
A	REMOVED GR. RELIEF FIT. FROM BOM	01/22/03	VZ		
B	ADDED ITEM #1	10/04/06	AML		
C	UPDATED BOM AND BORDER	09/21/17	SMM	JMP	ECN-17-511
D	REVISED NOTES, BALLOONS	02/20/18	JMP	JMP	ECN-18-154
E	ADDED NOTE ON WHEEL HUB	05/22/18	JEV	JMP	ECN-18-421
F	REVISED ITEM 1 DEPICTION	06/01/18	JMP	JMP	ECN-18-443
G	REVISED DRAWING, ADDED GREASE NOTE	04/07/21	SMM	JMP	ECN-21-203

DRAWN: AML
CHECKED:
APPROVED:

G & B SPECIALTIES INC.
MANUFACTURER OF QUALITY RAILROAD PRODUCTS
BERWICK, PENNSYLVANIA (570) 752-5901, FAX (570) 752-6397
DESIGN - ENGINEERING - MANUFACTURING

G & B SPECIALTIES INC. IS THE OWNER OF THIS DOCUMENT AND ITS CONTENTS AND IS FURNISHED FOR CONSORTIUM PURPOSES ONLY. NO RIGHTS ARE TO BE CONSIDERED IN RESPECT TO THIS DOCUMENT OR ITS CONTENTS, AND IS NOT TO BE COPIED, REPRODUCED, OR DISCLOSED TO OTHERS, EXCEPT WITH PRIOR WRITTEN CONSENT OF G & B SPECIALTIES INC.

10" WHEEL ASSEMBLY

SHEET	DRAWING NUMBER	DATE DRAWN	PART NUMBER	REVISION
1	R1600	05/23/06	R-1600	G

NOTE:
1. ITEMS 5 & 8 MUST NOT MOVE AFTER ITEMS 6 & 7 ARE INSTALLED.
2. ITEM 6 SHOULD BE TIGHTENED UNTIL ITEMS 5 & 8 DO NOT MOVE.
3. ONCE THIS IS ACCOMPLISHED, ITEM 6 MUST BE TIGHTENED TO NEXT SLOT LOCATION FOR INSERTION OF COTTER PIN.
4. BE CAREFUL THAT ITEM 5 DOES NOT CRACK.

BILL OF MATERIAL/PARTS LIST

ITEM	QTY	PART NUMBER	DESCRIPTION
1	1	R-1593	SPINDLE HOUSING
2	1	R-1602	SPINDLE - 10" WHEEL
3	1	R-1603	SPINDLE INSULATOR
4	1	R-007	INSULATING WASHER
5	1	R-005	INSULATING WASHER
6	1	R-016	3/4"-16 UNF SLOTTED HEX NUT
7	1	COTTER PIN	3/16" x 1-1/4"
8	1	F'WASHER	3/4" GR.8, TYPE-A

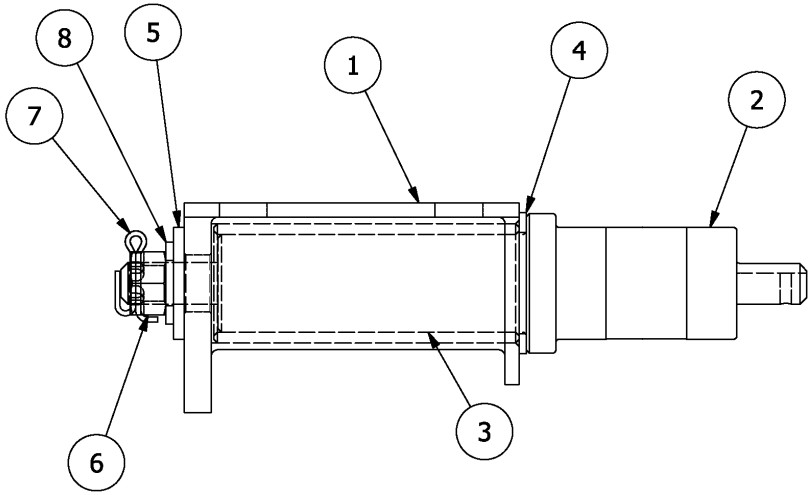

REV	DESCRIPTION OF CHANGES	DATE	BY	APPRV'D	ECN #
A	REVISION A RELEASED	08/25/06	AML		
B	REVISED LENGTH ITEM #7	03/08/11	AML	JL	ECN-11-090
C	ADDED NOTE	06/05/15	JL	JL	ECN-15-242
D	UPDATED BORDER	06/02/21	SMM	JMP	ECN-21-351

DRAWN AML
CHECKED
APPROVED

G & B SPECIALTIES INC.
MANUFACTURER OF QUALITY RAILROAD PRODUCTS
BERWICK, PENNSYLVANIA (570) 752-5901, FAX (570) 752-6397

DESIGN - ENGINEERING - MANUFACTURING

G & B SPECIALTIES INC. IS THE OWNER OF THIS DOCUMENT AND ITS CONTENTS AND IS FURNISHED FOR CONSORTIUM PURPOSES ONLY. NO RIGHTS ARE TO BE CONSIDERED IN RESPECT TO THIS DOCUMENT OR ITS CONTENTS, AND IS NOT TO BE COPIED, REPRODUCED OR DISCLOSED TO OTHERS, EXCEPT WITH PRIOR WRITTEN CONSENT OF G & B SPECIALTIES INC

10" WHEEL SUB-ASSEMBLY

SHEET	DRAWING NUMBER	DATE DRAWN	PART NUMBER	REVISION
1	R1600B	08/25/06	R-1600B	D

BILL OF MATERIAL/PARTS LIST

ITEM	QTY	PART NUMBER	DESCRIPTION
1	1	R-1600C	10" WHEEL SUB-ASSEMBLY MODIFICATION
2	1	H.H.C.S.	1/2" UNC x 4.00" Lg. - GR.8
3	2	F'WASHER	1/2" GR.8, TYPE-A
4	2	R-6505	SPINDLE BUSHING
5	1	Nylock Nut	1/2 Std NC Nylock Nut

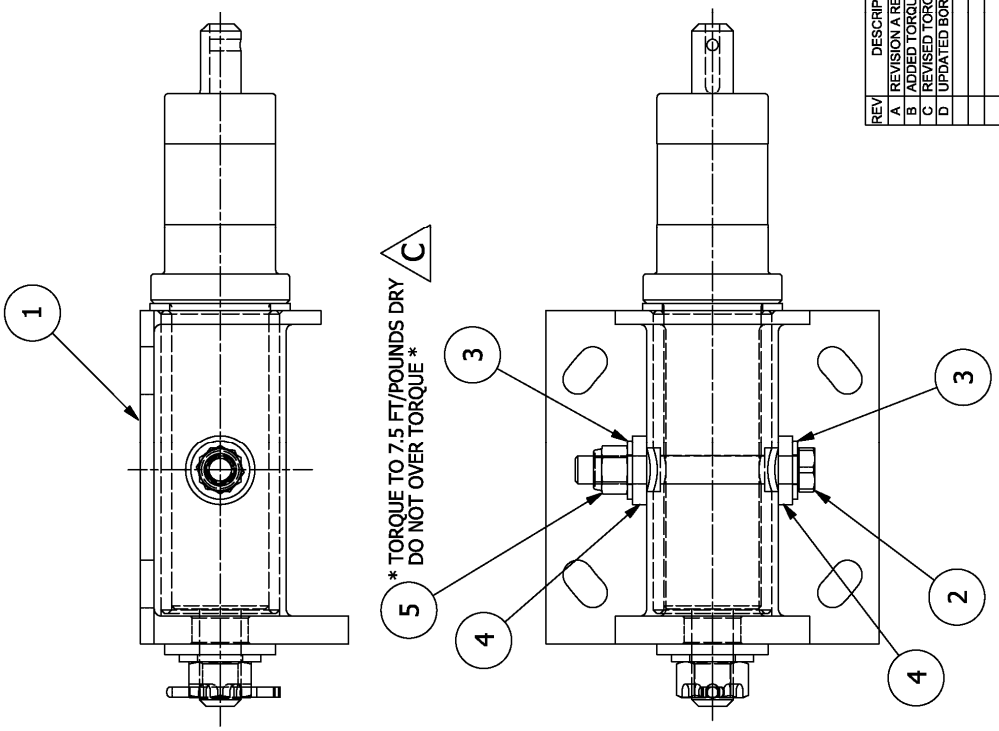

REV	DESCRIPTION OF CHANGES	DATE	BY	APPRV'D	ECN #
A	REVISION A RELEASED	08/25/06	AML		
B	ADDED TORQUE NOTES	12/10/14	KND		
C	REVISED TORQUE VALUE	04/14/15	JL		
D	UPDATED BORDER	06/02/21	SMM	JMP	ECN-21-353

DRAWN: AML
CHECKED:
APPROVED:

G & B SPECIALTIES INC.
MANUFACTURER OF QUALITY RAILROAD PRODUCTS
BERWICK, PENNSYLVANIA (570) 752-5901, FAX (570) 752-6397

G & B SPECIALTIES INC. IS THE OWNER OF THIS DOCUMENT AND ITS CONTENTS AND IS FURNISHED UPON CONDITION THAT THE INFORMATION IS NOT TO BE CONSIDERED IN RESPECT TO THIS DOCUMENT OR ANY PART THEREOF, TO BE USED, COPIED, REPRODUCED OR DISCLOSED TO OTHERS, EXCEPT WITH PRIOR WRITTEN CONSENT OF G & B SPECIALTIES INC.

DESIGN - ENGINEERING - MANUFACTURING
10" WHEEL SUB-ASSEMBLY MODIFIED ASSY
SIZE: 1 | PART NUMBER: R1600D | DATE: 08/25/06 | PART NUMBER: R-1600D | REVISION: D

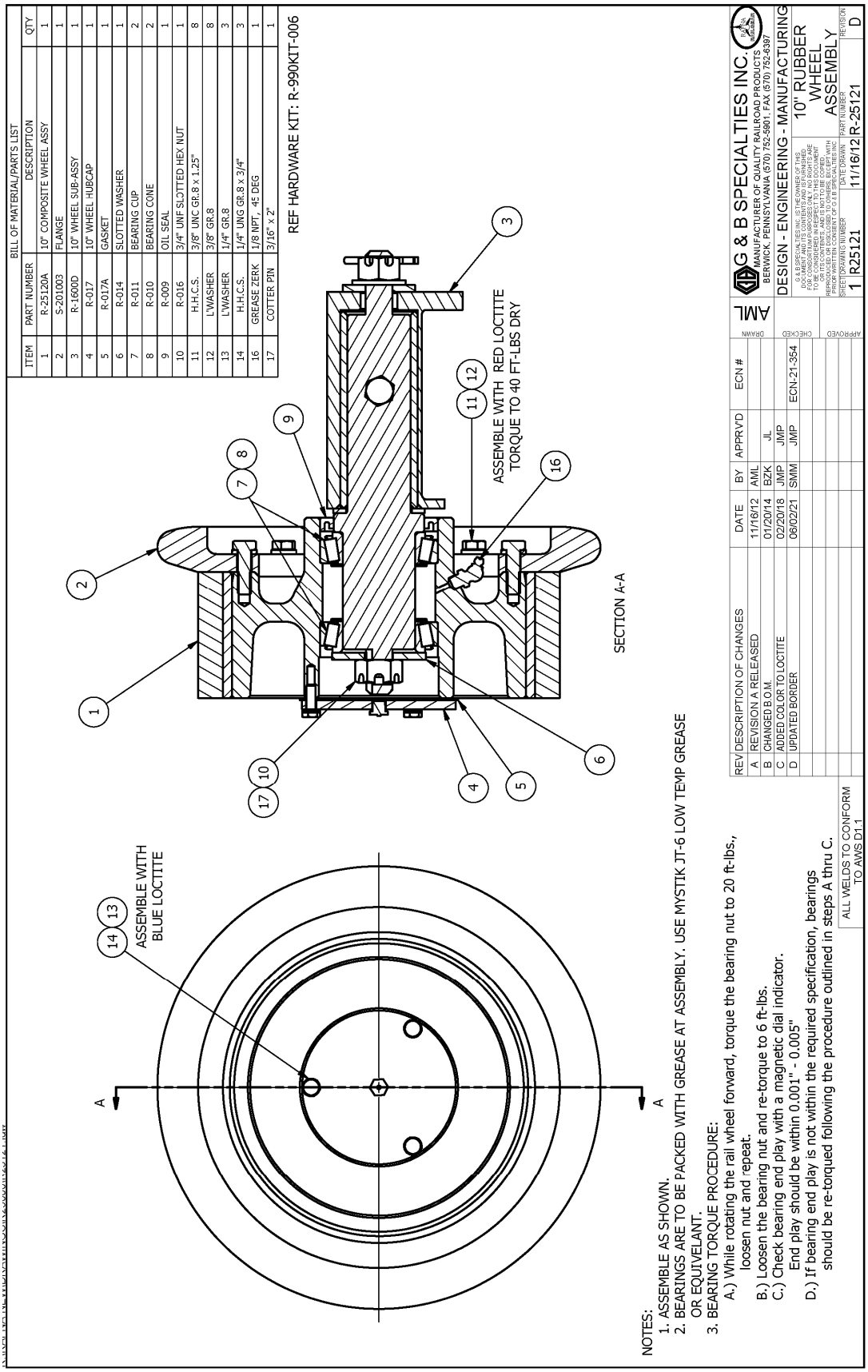
BILL OF MATERIAL/PARTS LIST
ITEM | PART NUMBER | DESCRIPTION | QTY
1 | R-25120A | 10" COMPOSITE WHEEL ASSY | 1
2 | S-201003 | FLANGE | 1
3 | R-1600D | 10" WHEEL SUB-ASSY | 1
4 | R-017 | 10" WHEEL HUBCAP | 1
5 | R-017A | GASKET | 1
6 | R-014 | SLOTTED WASHER | 1
7 | R-011 | BEARING CUP | 2
8 | R-010 | BEARING CONE | 2
9 | R-009 | OIL SEAL | 1
10 | R-016 | 3/4" UNF SLOTTED HEX NUT | 1
11 | H.H.C.S. | 3/8" UNC GR.8 x 1.25" | 8
12 | L'WASHER | 3/8" GR.8 | 8
13 | L'WASHER | 1/4" GR.8 | 3
14 | H.H.C.S. | 1/4" UNG GR.8 x 3/4" | 3
16 | GREASE ZERK | 1/8 NPT, 45 DEG | 1
17 | COTTER PIN | 3/16" x 2" | 1
REF HARDWARE KIT: R-990KIT-006
ASSEMBLE WITH RED LOCTITE
TORQUE TO 40 FT-LBS DRY
SECTION A-A
ASSEMBLE WITH
BLUE LOCTITE
A
A
NOTES:
1. ASSEMBLE AS SHOWN.
2. BEARINGS ARE TO BE PACKED WITH GREASE AT ASSEMBLY. USE MYSTIK JT-6 LOW TEMP GREASE OR EQUIVELANT.
3. BEARING TORQUE PROCEDURE:
A.) While rotating the rail wheel forward, torque the bearing nut to 20 ft-lbs., loosen nut and repeat.
B.) Loosen the bearing nut and re-torque to 6 ft-lbs.
C.) Check bearing end play with a magnetic dial indicator. End play should be within 0.001" - 0.005"
D.) If bearing end play is not within the required specification, bearings should be re-torqued following the procedure outlined in steps A thru C.
ALL WELDS TO CONFORM TO AWS D1.1
REV | DESCRIPTION OF CHANGES | DATE | BY | APPR'VD | ECN #
A | REVISION A RELEASED | 11/16/12 | AML | | |
B | CHANGED B.O.M. | 01/20/14 | BZK | JL | |
C | ADDED COLOR TO LOCTITE | 02/20/18 | JMP | JMP | |
D | UPDATED BORDER | 08/02/21 | SMM | JMP | ECN-21-354
DRAWN AML
CHECKED
APPROVED
G & B SPECIALTIES INC.
MANUFACTURER OF QUALITY RAILROAD PRODUCTS
BERWICK, PENNSYLVANIA (570) 752-5901, FAX (570) 752-6397
DESIGN - ENGINEERING - MANUFACTURING
10" RUBBER WHEEL ASSEMBLY
SHEET | DRAWING NUMBER | DATE DRAWN | PART NUMBER | REVISION
1 | R25121 | 11/16/12 | R-25121 | D

BILL OF MATERIAL/PARTS LIST

ITEM	QTY	PART NUMBER	DESCRIPTION
1	1	R-20246	RUBBER SWEEP
2	1	R-21101D	RAIL SWEEP BRACKET, DRIVERS SIDE
		R-21101P	RAIL SWEEP BRACKET, PASSENGERS SIDE
3	1	R-5561	SWEEPER PLATE
4	2	H.H.C.S.	1/4" UNC GR.8 X 1.25" Lg
5	4	F'WASHER	1/4" TYPE-A GR. 8
6	2	NYLOCK NUT	1/4" UNC GR. 8

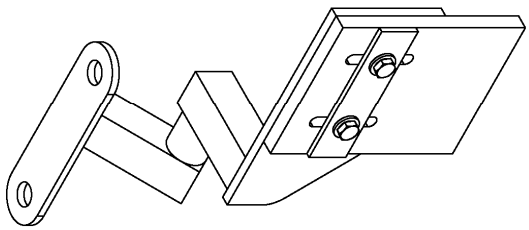

NOTES:
1. DRIVERS SIDE SHOWN
PASSENGERS SIDE TYPICAL

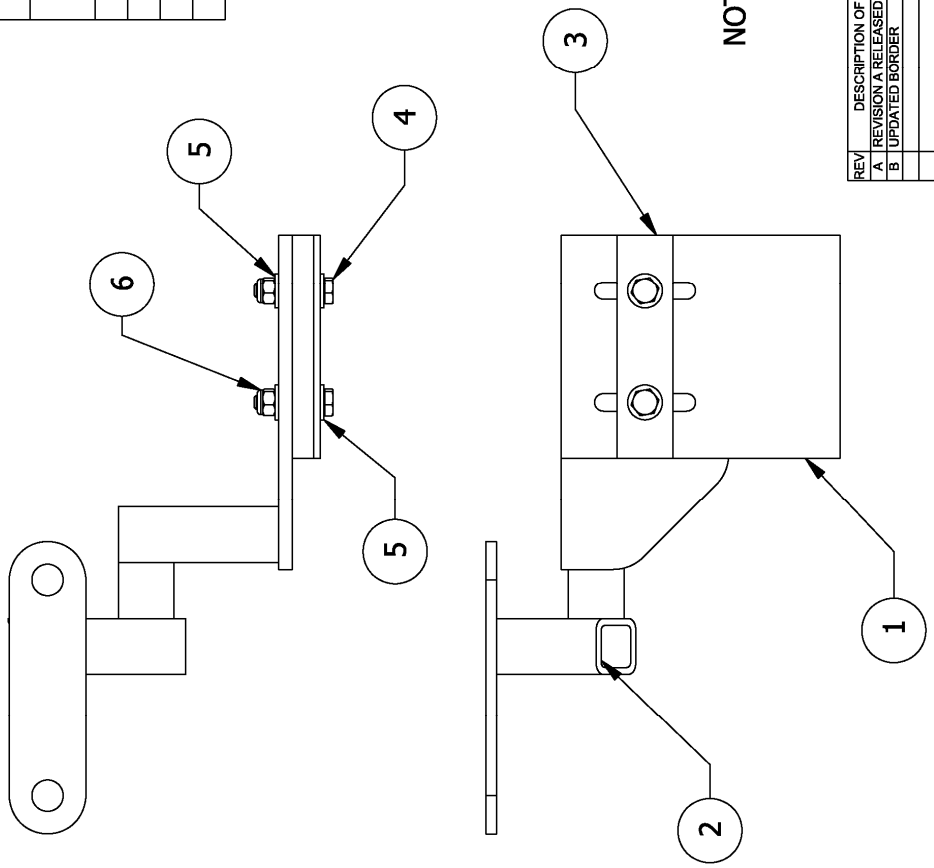

REV	DESCRIPTION OF CHANGES	DATE	BY	APPRV'D	ECN #
A	REVISION A RELEASED	07/07/10	JMP		
B	UPDATED BORDER	06/02/21	SMM		

DRAWN: JMP
CHECKED
APPROVED

G & B SPECIALTIES INC.
MANUFACTURER OF QUALITY RAILROAD PRODUCTS
BERWICK, PENNSYLVANIA (570) 752-5901, FAX (570) 752-6397

DESIGN - ENGINEERING - MANUFACTURING

G & B SPECIALTIES INC. IS THE OWNER OF THIS DOCUMENT AND ITS CONTENTS AND IS FURNISHED TO CUSTOMER IN CONFIDENCE. NO RIGHTS ARE TO BE CONSIDERED IN RESPECT TO THIS DOCUMENT OR ITS CONTENTS, AND IS NOT TO BE COPIED, REPRODUCED OR DISCLOSED TO OTHERS WITHOUT PRIOR WRITTEN CONSENT OF G & B SPECIALTIES INC.

RAIL SWEEP ASSEMBLY

SIZE: 1 | DRAWING NUMBER: R21102 | DATE: 07/07/10 | PART NUMBER: R-21102 | REVISION: B

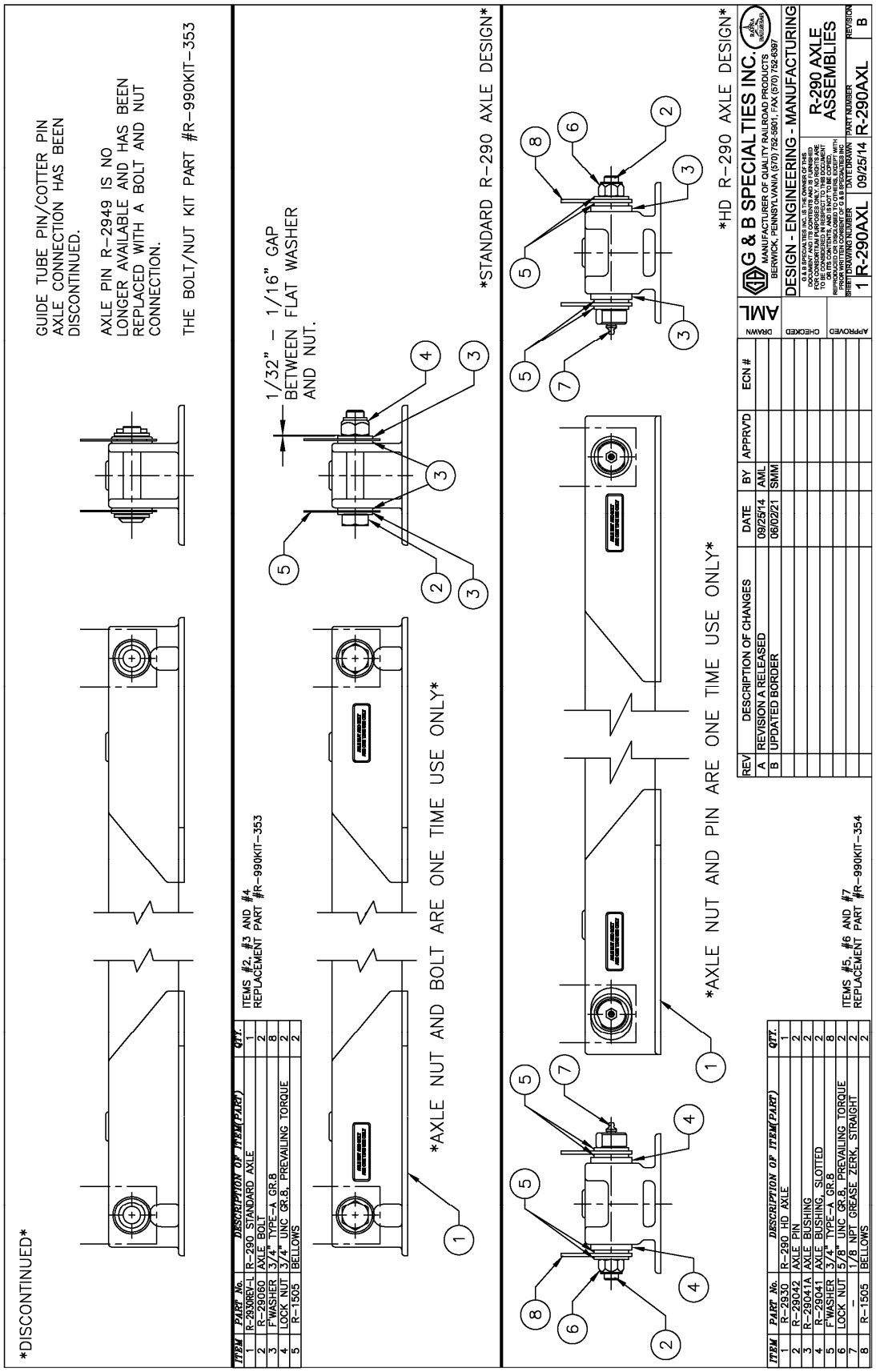
DISCONTINUED
GUIDE TUBE PIN/COTTER PIN AXLE CONNECTION HAS BEEN DISCONTINUED.
AXLE PIN R-2949 IS NO LONGER AVAILABLE AND HAS BEEN REPLACED WITH A BOLT AND NUT CONNECTION.
THE BOLT/NUT KIT PART #R-990KIT-353
1/32" - 1/16" GAP BETWEEN FLAT WASHER AND NUT.
STANDARD R-290 AXLE DESIGN
HD R-290 AXLE DESIGN
AXLE NUT AND BOLT ARE ONE TIME USE ONLY
AXLE NUT AND PIN ARE ONE TIME USE ONLY
ITEMS #2, #3 AND #4 REPLACEMENT PART #R-990KIT-353
ITEMS #5, #6 AND #7 REPLACEMENT PART #R-990KIT-354
ITEM PART No. DESCRIPTION OF ITEM(PART) QTY.
1 R-2930REV-L R-290 STANDARD AXLE 1
2 R-29060 AXLE BOLT 2
3 F WASHER 3/4" TYPE-A GR.8 8
4 LOCK NUT 3/4" UNC GR.8, PREVAILING TORQUE 2
5 R-1505 BELLOWS 2
ITEM PART No. DESCRIPTION OF ITEM(PART) QTY.
1 R-2930 R-290 HD AXLE 1
2 R-29042 AXLE PIN 2
3 R-29041A AXLE BUSHING 2
4 R-29041 AXLE BUSHING, SLOTTED 2
5 F WASHER 3/4" TYPE-A GR.8 8
6 LOCK NUT 5/8" UNC GR.8, PREVAILING TORQUE 2
7 - 1/8 NPT GREASE ZERK, STRAIGHT 2
8 R-1505 BELLOWS 2
REV DESCRIPTION OF CHANGES DATE BY APPRV'D ECN #
A REVISION A RELEASED 09/25/14 AML SMM
B UPDATED BORDER 06/02/21
DRAWN AML
CHECKED
APPROVED
G & B SPECIALTIES INC.
MANUFACTURER OF QUALITY RAILROAD PRODUCTS
BERWICK, PENNSYLVANIA (570) 752-5901, FAX (570) 752-6397
DESIGN - ENGINEERING - MANUFACTURING
R-290 AXLE ASSEMBLIES
PART NUMBER R-290AXL
REVISION B
1 R-290AXL 09/25/14 R-290AXL

ITEM	PART NO.	DESCRIPTION	REQ'D
1	R-10112	ROD END	1
2	990310-075-20F	3/4"-16 HEX JAM NUT, GR 8, PLAIN FINISH	1
3	6400-4-6	3/8 ORB MALE x 1/4 JIC MALE	1
4	6500-4-4	1/4 JIC FEMALE x 1/4 JIC MALE, 90	1
5	849FS0-04-06	JIC(-4) TO MALE O-RING(-6), 90 DEGREES	1
6	R-9115A	CYLINDER	1

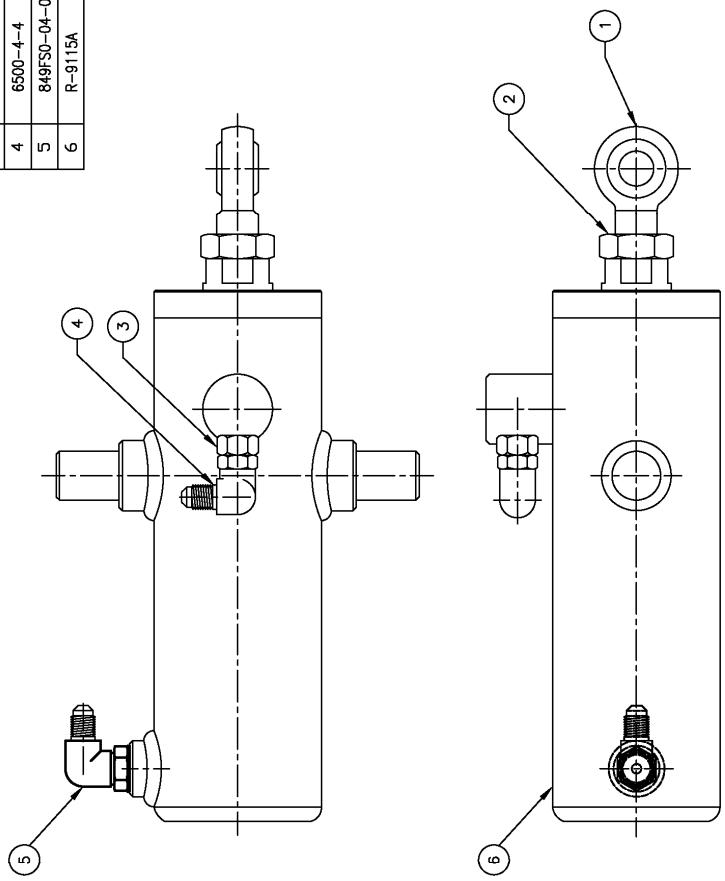

REV	DESCRIPTION OF CHANGES	DATE	BY	APPR'D	ECN #
A	REVISION A RELEASED	05/15/13	AML		
M	REVISED BOM	03/10/15	AML		
N	ADDED JAM NUT SPEC	01/20/16	JL		ECN-16-065
P	UPDATED DIMENSIONS AND BORDER	04/26/18	SMM	JMP	ECN-18-367

DRAWN AML
CHECKED
APPROVED

G & B SPECIALTIES INC.
MANUFACTURER OF QUALITY RAILROAD PRODUCTS
BERWICK, PENNSYLVANIA (570) 752-5901, FAX (570) 752-6397

DESIGN - ENGINEERING - MANUFACTURING

G & B SPECIALTIES INC. THIS IS THE OWNER'S THE DOCUMENT AND ITS CONTENTS AND IS FURNISHED TO BE CONSIDERED IN RESPECT TO THIS DOCUMENT OR ITS CONTENTS, AND IS NOT TO BE COPIED, REPRODUCED OR DISCLOSED TO OTHERS WITHOUT PRIOR WRITTEN CONSENT OF G & B SPECIALTIES INC

R-290 CYLINDER ASSEMBLY

SHEET 1 DRAWING NUMBER 1 R9115 | DATE DRAWN 05/15/13 | PART NUMBER R-9115 | REVISION P